MICROPLEX
P.O. BOX 45436
DALLAS, TX 75245

10 now face drug charges

Ten individuals have been arrested and now face charges of 21 counts of sale of a controlled substance here in Scurry County.

The arrests capped what Sheriff Keith Collier said was 90 days of undercover work by his department, Snyder-based Texas Ranger David Byrnes and an individual described as an undercover agent working in conjunction with them.

Collier said Wednesday morning the investigation begin Jan. 9. Since that time, he said the undercover officer had been working the Snyder-Scurry County area seeking information regarding the buying and selling of illegal drugs.

The cases now filed locally mostly involve the alleged sale of types of amphetamines, he said.

Warrants for arrests of the suspects were issued in 132nd District Court here Monday and county officers began serving these shortly before midnight that night.

See CHARGES, page 11

Reagan wins tough MX vote

WASHINGTON (AP) — President Reagan's decisive Senate victory on spending for the MX missile sets the stage for three other votes he must win before Congress will release $1.5 billion to resume MX production.

The Senate's 55-45 vote Tuesday to free funds to build and deploy a second batch of 21 of the highly accurate MX missiles underscored the president's powers of persuasion and gave Reagan the first major legislative victory of his second White House term.

Senator after senator credited the victory to Reagan's personal lobbying and his adroit use of the argument that killing the MX system would undermine U.S. arms control negotiators and set back both national security and the cause of world peace.

"The power of the presidency is amazing," said Sen. Dale Bumpers, D-Ark., an MX opponent.

"I just didn't know how many people were going to be influenced, both by the talks and by the president's efforts," said Sen. Gary Hart, D-Colo., leader of anti-MX forces on the Senate floor.

Serious doubts remain in Congress about the effectiveness of the MX system, its impact as an arms control bargaining chip and the wisdom of deploying the full fleet of 100 missiles envisioned by the administration.

And even if Reagan prevails in the battle to free the MX funds Congress impounded last year, the future of the weapons system and its place in national defense and arms control is far from secure.

Several key senators said they do not intend to vote to authorize or appropriate the $3.2 billion requested by the president to buy 48 more MX missiles during fiscal 1986.

The Senate, as part of an MX compromise reached last year, now must vote on whether to actually appropriate the impounded MX money for fiscal 1985. That vote is scheduled for today, and the House is set for an identical pair of votes next week.

A key Democratic aide, asking not to be identified by name, said a survey of all House members shows a near even split on the immediate issue of lifting restrictions on MX spending, with about 200 representatives for the MX, about 200 against it and the rest uncommitted.

"I think this is winnable in the House," Hart said of his anti-MX efforts. "But I think it's going to be tough."

Reagan, who already has begun lobbying House members, said Tuesday, "it will be real tight."

The House Appropriations and Armed Services committees both scheduled MX votes today. The House Democratic Caucus also was to meet to discuss the issue.

Reagan hailed the Senate vote as sending "a message of American resolve to the world."

The Snyder Daily News

Vol. 37 No. 275 | Snyder, Texas (79549) | 12 Pages 25 Cents

Wednesday
March 20, 1985

Ask Us

Q. — What are the largest crowds counted for a local chamber banquet?

A. — Several banquets have had attendance estimated in excess of 1,000 persons. This Thursday's event has been limited to 750 tickets due to a new seating arrangement.

In Brief

F-15 crashes

SEOUL, South Korea (AP) — A U.S. Air Force F-15a warplane taking part in the major training exercise Team Spirit '85 crashed early today in the Yellow Sea and its pilot is missing, U.S. Air Force officials said.

A search for the missing pilot ended at 4 p.m. (2 a.m. EST), about 7½-hours after the single-seat fighter plane went down off South Korea's west coast, about 50 miles northwest of Kunsan air base, they said.

7 to trial

MEXICO CITY (AP) — A federal judge has ordered six policeman and a former officer to go on trial in the case of a kidnapped U.S. drug agent whose badly beaten body was found in a plastic bag on a Mexican ranch.

In announcing his decision on Tuesday, Judge Gonzalo Ballesteros Tena upheld kidnapping and murder charges against only three of the defendants.

Local

Rain report

Evening rains deposited varying amounts of moisture in Scurry County Tuesday.

Snyder's official count was .82 of an inch. So far for 1985, 3.56 inches have been recorded.

Lloyd Mountain reported .85 of an inch and the area west of Snyder received .75 of an inch.

Ira recorded 1.07 inches.

Other totals were Lake Thomas, .09; Hermleigh, .06; Fluvanna, .07; Camp Springs, .06; and Dunn, .63.

Weather

Snyder Temperatures: High Tuesday, 56 degrees; low, 40 degrees; reading at 7 a.m. Wednesday, 40 degrees; .82 of an inch precipitation; total precipitation for 1985 to date, 3.56 inches.

Snyder Area Forecast: Tonight brisk north winds 10 to 20 mph, diminishing to 10 mph by midnight. Clearing by midnight with low in mid 30s. Thursday breezy and sunny. High in the mid 60s. North winds 10 to 20 mph. Chance of rain 70 percent today.

One-act advances at zone

The Snyder High School theatre production of William Shakespeare's "Romeo and Juliet" advanced to district competition following the zone contest held Tuesday in Sweetwater.

The local group — along with Sweetwater High's production of "Medal of Honor Rag" — will now perform next Tuesday in the District 4-AAAA contest scheduled in Worsham Auditorium.

The Snyder players — led by Dana Parham who was named best actress at Tuesday's competition — captured nine of 18 available individual awards.

Named to the Zone All-Star Cast from the local group were John Hamlett, Brad Vincent, Patrick Malone, Karl Menges, Chelle Krueger and Penny Noble.

Earning honorable mention plaudits for their work Tuesday were Kyle Hawes and Jamie Cofer.

West Zone competition for the district was held in Pecos Tues-

See PLAY, page 11

INDIVIDUAL WINNERS — These nine students were singled out for honors Tuesday following the zone performance of the one-act play "Romeo and Juliet." Dana Parham (seated, second from left) was named best actress at the competition, conducted in Sweetwater. Others honored were (front from left) Penny Noble, Parham, Chelle Krueger, Karl Menges, (back row) John Hamlett, Brad Vincent, Kyle Hawes, Jamie Cofer and Patrick Malone. (SDN Staff Photo)

Blood donors total 112

Some 112 units of blood were drawn here Tuesday and "gallon" donor pins given out to seven repeat donors.

Individuals registering to give blood totaled 125 Tuesday. In addition, the drive listed 20 first time donors.

Three two-gallon pins were given out. Receiving there were Allene Terry, Manuel Garcia and Bob Travis. These were in addition to four one-gallon pins given to Don Campbell, Tony Whittenburg, Linda Compton and Tommy Henry.

In addition to thanking those who registered to give blood, drive officials expressed thanks to the Cub Scouts of Pack 258, Den 2, who helped cleanup at drive's end. Den mothers are Peggy Byrom and Alice Barrego. Cubmaster is Jack McGlaun.

Scouts helping were Barretta Collins, Alonzo Deere, Sammy Massingill, Byron Luna, Richard Deere, Israel Barrego, Louis Soliz.

Third in a series...

Award honors county oilpatch

The McLaughlin Award — originally known as the McLaughlin Oil Award and named for C.T. McLaughlin — was begun in 1977 by the family of the Scurry County oil man, rancher, political figure, art collector and philanthropist.

As in year's past, it will be presented again Thursday at the Snyder Chamber of Commerce Banquet. The event is set to begin at 6:30 p.m. in the Scurry County Coliseum.

The criteria for the award's presentation has been the individuals significant contribution to the oil industry in Snyder and Scurry County — characteristics attributed to the award's namesake.

McLaughlin died here July 29, 1975 at the age of 78. He was originally from Pennsylvania and had adopted Texas as his home state for 40 years prior to his death.

He developed oil field producing properties under his Diamond

See AWARD, page 11

Award okayed, project endorsed...

Castillo named to chamber

Snyder Chamber of Commerce appointed a new director, approved a new award and reaffirmed its support for the FM 1611 project Tuesday afternoon during the regular March session.

Fred Castillo, co-owner and manager of Bennett Office Supply, is the newest director. His nomination — provided by the chamber's nominating committee — was approved unanimously shortly after the meeting began. He then joined other directors for the remainder of the meeting.

Castillo replaces Tom Latos, who was transferred from the city recently.

Directors also unanimously approved bestowing a President's Award at the annual chamber banquet, due this Thursday. The award will be presented for outstanding service to the chamber.

It was noted it will not necessarily be given every year. Selection will be made by the president of the chamber and the executive committee.

Directors also reaffirmed their support for the work now planned and hopefully a future extension of FM 1611 — creating a truck route around the city's western half.

City Manager John Gayle presented an update on the project and asked the chamber to make a presentation at a March 26 meeting in Abilene with state highway officials.

Jack Denman will make the presentation on behalf of the chamber and in support of the project.

Directors also approved Harley Bynum as the chairman of the newly reactivated public relations committee.

President Roy Baze reported that 750 tickets have been sold for Thursday night's banquet and that there is a waiting list for the banquet. Baze urged anyone that will be unable to attend the banquet to turn in their tickets at the chamber office for a refund so that the tickets may be resold to those on the waiting list.

Baze reported that the 750

See MEETING, page 11

Twenties 'musical' is banquet feature

In keeping with its 1920's-30's theme, individuals attending Thursday's Snyder Chamber of Commerce Banquet will be entertained by a "Gatsby Review" comprised of local talent.

The review is the creation of Mike Thornton, who is heading up the entertainment for this year's banquet.

Thornton, art professor at Western Texas College, said Wednesday a 20-minute musical review program is planned and it will follow the format of a "talent show of the 20's."

The performers will also provide dinner music, then send banquet-goers out of the coliseum with what Thornton promised would be a "rousing grand finale."

The entertainment portion of the program will feature six numbers. Singers will be backed by a combo consisting of Brent Hardegree, Jane Womack, Marshall Billingsley and John Burke.

Soloists are Renee King and Jeanna Fox. A trio of singers will feature Cheri Stewart, Mary Lynn Hokett and Rebekah Thornton.

Charleston-style dancing will be provided also by Cheree Loveless, Latrice King, Jeff Combs and Aaron Knight.

These events will precede and conclude the night's featured address by Joe Griffith of Dallas.

It is estimated Griffith has made over 2,000 speeches during nearly 20 years as a professional speaker.

The SDN Column

By Roy McQueen

The feller on Deep Creek says, "Children brighten up the home because they never turn off the lights."

Geneva McKinley of Snyder is another whose "Most Embarrassing Moment" involved an automobile. She wrote:

"A few years ago we purchased a new car and each time we'd have it out in the rain, the carpet in the trunk would be wet. We repeatedly took it back to the dealer, but we could not find a leak.

"Finally, my husband came up with the idea for one of us to get inside the trunk while the other turned the water hose on it. At the last moment, he decided he was too large to get inside.

"Something told me I should not crawl in there, but I didn't have long enough to think about it. The moment he slammed it shut he asked, 'Where's the key?'

"I answered, 'Right here on my finger, and I want out of here right now!' My first thought was panic, but I realized I couldn't hyperventilate or I'd die right there.

"He asked if I had ever had a new key made. I told him where the keys were but instructed him to call our son who lived several blocks away to come and find the keys.

"I'd already conditioned myself to survive that long. To my great surprise, the trunk lid opened in a few minutes. He had found the key--the first thing he'd found all by himself in over 35 years of marriage.

"I immediately told him he'd better never tell anyone about this. I didn't want anyone to know I was dumb enough to get in that trunk in the first place, especially with the key ring on my finger.

"When I got out, we laughed hard and long and went into the house before we realized we hadn't found the leak. We determined he was small enough to get inside after all, but he made sure the key was outside before he let me shut the lid.

"To think that I got in that trunk with the key was the most embarrassing moment of my life. However, after we had such a good laugh about it, I decided to tell the children and grandchildren who all couldn't believe I would actually get in there and allow my husband to close the door. I was embarrassed, but not enough to crawl in a hole or any other tight place. By the way, we had to take the car to a body shop to locate the leak."

For Results Use Snyder Daily News Classified Ads Call 573-5486

Parliament backing Belgian leaders

Did You Know?

Your Hospital
Cogdell Memorial

The medical record is a legal document and may not be reviewed by any person without proper authorization.

BRUSSELS, Belgium (AP) — After 15 hours of heated debate, Parliament today backed Prime Minister Wilfried Martens' decision to deploy NATO nuclear missiles in Belgium.

The vote of confidence, approved by 116-93 with one abstention, was a major victory for Martens, who had been expected to win by a narrow margin, and a victory for the Reagan administration, which had strongly urged the deployment. On Friday, Martens informed the house his government had deployed the first 16 of the 48 U.S.-made missiles Belgium pledged in 1979 to base on its territory. He insisted the deployment was defensive, not aggressive, and was needed to offset Soviet SS-20s in Eastern Europe.

President Reagan had told Martens during the Belgian leader's January visit to Washington that Belgium's support was needed to bolster the West's hand in the U.S.-Soviet arms talks in Geneva, Switzerland.

Two members of the 212-seat House of Representatives were absent. Martens needed 107 votes. The house is the leading assembly in the Belgian Parliament. Senate approval is considered a formality.

The debate began at 2 p.m. Tuesday, and the vote came at 4:50 a.m. today, two days after a rally in Brussels, where more than 100,000 demonstrators called for the defeat of Martens' four-year-old coalition.

Foreign Minister Leo Tindemans said: "Politicians must not always blindly follow public opinion. We don't want to be Chamberlains or Daladiers who followed their public opinion."

He was refering to British Prime Minister Neville Chamberlain and French Premier Edouard Daladier. The two signed with Adolf Hitler the 1938 Munich accord, which they believed would avoid World War II.

At one point in the debate, pacifists in the public gallery threw pamphlets and paper bags filled with dirt from Florennes, the air base where the missiles are being deployed. They were whisked away by military policemen.

ECKERD
AMERICA'S FAMILY DRUG STORE

SAVINGS O' THE GREEN

Sale Prices Good Thru Saturday, March 23rd.
We reserve the right to limit quantities.
See the yellow pages for the Eckerd nearest you.

1.77 CHECK-UP TOOTHPASTE 2 TYPES PUMP or TUBE

REBATE 1.59 -1.59 FREE HDR SHAMPOO or CONDITIONER 7-OZ. 2 TYPES By REVLON

83¢ IVORY PERSONAL-SIZE SOAP 3.5-OZ. 4-PACK Price reflects cents off label

2.09 HERSHEY'S REGULAR or PASTEL KISSES 14-OZ. Reg. 2.99

2/1.00 LUDEN'S JELLY BIRD EGGS 12-OZ. Reg. 79¢ ea.

1.49 JONTUE COLOGNE SPRAY .25-OZ.

2/1.50 REVLON NAIL COLOR TRIAL TRAVEL SIZE .4-OZ.

3.49 NUTRA NAIL or NUTRA FIX YOUR CHOICE Regs. to 4.95

4/1.00 ELMER'S GOLD BRICK RABBITS or PECAN SINGLE EGG

1.60 ASSORTED READY-TO-FILL EASTER BASKETS YOUR CHOICE

79¢ CLAIRMIST HAIR SPRAY 4-OZ. 3 TYPES

1.47 SECRET 1.25-OZ., DRY IDEA, SURE, or BAN ROLL-ON 1.5-OZ. YOUR CHOICE

1.69 OLAY BEAUTY CLEANSER 2-OZ.

88¢ LEAF SPECKLED ROBIN EGGS 9-OZ. Reg. 1.19

99¢ DUDLEY'S DIP AN EGG EASTER EGG COLORING KIT Reg. 1.49

2.00 OFF YOUR LIFE DAILY PAK CHOICE OF FORMULAS 30's Reg. 11.79 to 13.59

2.29 VICKS FORMULA COUGH MIXTURE 3-OZ. CHOICE OF TYPES

2.49 EXTRA-STRENGTH TYLENOL CAPLETS PACK OF 50 Limit 2

4.88 DIGITECH BATTERY CALCULATOR #E640 Reg. 5.99

2/3.00 LIFESAVERS EASTER STORYBOOK Reg. 1.99 ea.

63¢ MASSENGILL DISPOSABLE DOUCHE 4 TYPES SINGLES Medicated not included

79¢ SUN-SPUN ORLON YARN Reg. 1.19

4.99 300-POCKET PHOTO ALBUM 3½" x 5" Reg. 7.99

12.99 HIBACHI GRILL 12" x 16" PEDESTAL Reg. 17.99 With FREE tools

2.88 STOW AWAY GRILL Reg. 3.49

9.99 SERGIO VALENTE LADIES' LCD WATCHES Reg. 12.99

5.98 FASHION TWILL SHORTS Reg. 7.99

32.99 RONSON DOUBLE FOIL ELECTRIC SHAVER #RFD-1 Reg. 39.99

1.79 TIDE LIQUID LAUNDRY DETERGENT 32-OZ.

14.99 DURO-TRED RADIAL GARDEN HOSE ⅝" x 80' #8640 Reg. 17.99

IMPORTANT NEWS FOR HERPES SUFFERERS...
NEW ZOVIRAX® CAPSULES
Now available at all Eckerd Pharmacies by prescription only.
Zovirax (brand of acyclovir) is a registered trademark of Burroughs Wellcome Co.

VISA
MasterCard

ECKERD GIVES YOU TWICE AS MANY REASONS TO USE SYSTEM 2

Dr. Lamb

Lawrence E. Lamb, M.D.

Light exposure merits caution

By Lawrence Lamb, M.D.

DEAR DR. LAMB — There are fluorescent lights around my makeup mirror, and I have read that ultraviolet light causes cataracts. Is this true?

DEAR READER — Ultraviolet light from the sun is essential to life, but it also can be damaging. It causes sunburn, and it definitely can damage the retina at the back of the eye. The retina is the sensitive screen on which images are projected from the lens. If the retina is damaged, it affects one's vision.

The harmful ultraviolet radiation is filtered out by the cornea — the clear covering in front of the pupil — and additional radiation is absorbed by the lens. All of this protects the retina. However, ultraviolet light is thought to lead to opacification of the lens — in other words, cataracts.

This is why people in sunny areas or those who are exposed to the sun a lot are more likely to develop cataracts.

People who have had cataract operations should wear protective sunglasses that help filter out ultraviolet light. Since, after surgery, these people don't have a natural lens, the retina may be harmed unless it is protected.

How dangerous is ultraviolet light around a mirror? This depends on how much ultraviolet light is emitted and whether the rays are directed toward the eyes. I would certainly advise caution, but one also needs to exercise caution about excessive exposure to the sun. If more sun worshippers were aware of this early in life, it might save them some trouble later.

I'm sending you The Health Letter, Special Report 34, Cataracts, which discusses the causes of cataracts and what should be done about them. Others who want this issue can send 75 cents with a long, stamped, self-addressed envelope for it to me in care of this newspaper, P.O. Box 1551, Radio City Station, New York, NY 10019.

DEAR DR. LAMB — I have smoked for more than 30 years, but never more than seven or eight cigarettes a day, and usually only two or three. Over the last several months, I have coughed up small blobs of white, gelatinous, solid material, sometimes about the size of a grapeseed.

I stopped smoking cold turkey about a month ago because I had a tight feeling in my chest and it scared me into quitting.

Since I no longer smoke, will my lungs or bronchial tubes get any worse? Occasionally I hear rattling in both lungs. I'm 48 and in good health otherwise.

DEAR READER — I can't tell whether your problem will worsen without knowing exactly what it is. However, your lungs will function better than they would have if you continued to smoke.

You may have chronic bronchitis because you smoked even a small amount daily for 30 years. Cigarette smoke is an air pollutant, and breathed polluted air (from your cigarettes) for 30 years.

Quitting was the best thing you could have done. In most instances, giving up smoking leads to significant improvement in the lungs. Improvements often will continue for up to 14 years. After that, one achieves the maximum benefits from stopping smoking.

Stopping smoking also significantly decreases one's chances of having a heart attack or a stroke.

(NEWSPAPER ENTERPRISE ASSN.)

THE SNYDER DAILY NEWS

Published each Sunday morning and each evening, except Saturday, by Snyder Publishing Co. Inc., at Snyder, Texas 79549.

Entered as second class matter at the post office at Snyder, Texas. Publication Number USPS611-520.

SUBSCRIPTION RATES: By carrier in Snyder, $4.72 per month.

By mail in Scurry and adjoining counties, one year $36.00, balance of Texas and all other states, $53.03.

Roy McQueen, Publisher
Donny Brown, Managing Editor
MEMBER OF THE ASSOCIATED PRESS

The Associated Press is exclusively entitled to use for republication all news dispatches in this newspaper and also local news published for republication of special dispatches.

Community Calendar

WEDNESDAY

Cosmorama Study Club; MAWC; 4 p.m.

THURSDAY

Movie Time; Scurry County Library; 9:30 a.m.

Honey Do's Extension Homemakers Club; home of Ethel Head, W. 37th St.; 9:30 a.m.

Cogdell Memorial Hospital Auxiliary; board room; 10 a.m.

Novice Duplicate Bridge Club; Snyder Country Club; 1:30 p.m.

Weight Watchers of West Texas; basement of First Presbyterian Church; 6:30 p.m. New members welcome and should register at 6 p.m.

Order of the Eastern Star Snyder Chapter 459; Masonic Hall; 7:30 p.m.

Scurry County Alcoholics Anonymous; behind Humble Smith School, 3106 37th St.; 8 p.m. For more information call 573-0476 or 573-5337.

SCS Notes

By Ricky Linex
Range Conservationist

LARGEMOUTH BASS

This species is probably the most sought after fish in Texas. In the farm pond environment it is the "super" predator. Bass have been, are currently and probably always will be stocked in small ponds of less than one acre. These small ponds require an intense management effort to maintain a proper bass-forage relationship. The largemouth bass really shines when stocked with forage species in ponds of one to five acres.

Ask any bass fisherman what the new state record is for largemouth bass and he'll tell you 15 pounds 8 ounces. This record changed several times in the pre-spawn period of 1983 and will probably rise again this year for one reason — the introduction of "Florida" bass into Texas lakes. These "super" bass were introduced in the early 1970's by the Texas Parks and Wildlife Department to provide extra weight to our native largemouths. Stocking Florida bass in private lakes by individuals began as early as 1971 or 1972.

Pond owners in the northwest portion of Texas may be somewhat limited in stocking true Florida bass. Exceptions will occur, but the Florida bass generally does not perform well in ponds less than three acres in size. These Florida bass are also more sensitive to rapid temperature fluctuations and may not survive if the ponds are shallow (less than 10 feet) and/or wind swept, resulting in a rapid cooling and turnover of the water column. However, the hybrid Florida bass which is a cross between true Florida and our native largemouth are suited to larger ponds in West Texas.

CHANNEL CATFISH

The channel catfish is rapidly becoming the most popular farm pond fish stocked in Texas. Channel cats can be purchased from nearly all private hatcheries in Texas. It does well in farm ponds if stocked alone or in combination with bass and bluegills. Largemouth bass and channel cats do well together in properly managed ponds without the addition of any forage species.

BLUEGILL

Bluegill are stocked in farm ponds to provide bass and sometimes catfish with a species to feed upon. Many pond owners are cautious of stocking bluegills because of bad past experiences with the fish's tendency to overpopulate. Bluegills are, however, the only fish which can furnish enough young to satisfy the fierce appetite of the bass. Without a good forage species the quality of your bass population would rapidly decline. Bluegill are also an excellent sport fish.

You may feel that stocking fewer bluegill than recommended will help prevent this over population, right? Wrong! Just the opposite may be true. Over population by bluegill usually occurs because too few are originally stocked resulting in an unusually large first spawn. This high production and survival rate is the result of little competition for available food and space. This problem is further intensified when bass are overharvested during the first season of fishing, leaving the young bluegill with no control.

FATHEAD MINNOW

The fathead minnow is stocked to provide forage for catfish stocked alone or for first year bass. This minnow cannot sustain the predatory pressure from an established bass population and will likely be eliminated after a year or two. They are useful when stocked with channel catfish which are not being fed, or to promote first year growth of largemouth bass.

Spawning devices must be provided if fatheads are to sustain a population. These devices are simple and inexpensive, such as floating boards, large rocks, concrete tiles or blocks and lumber pallets. These devices should be placed in water at three feet or less. The males pick up fertilized eggs and attach them to the underside of any object in shallow water.

PRESENT LIFE OF IRVING BERLIN — About 50 members and guests of the Altrurian Daughters Club heard Annadelle and Company of Abilene present the life of Irving Berlin. At last Wednesday's meeting in the Martha Ann Woman's Club, the company traced Berlin's life from his birth in Russia nearly 100 years ago to the present in words, music and songs. Margaret Birdwell and Maggie Simpson served as hostesses. Special guests attending the meeting were members of the former Altrurian Club. Members of Annadelle and Company include Annadelle Turnbull (on the left), June Gill (at the organ) and Betty Dunn, vocalist. (SDN Staff Photo)

Sets computer typing record

TARRYTOWN, N.Y. (AP) — Barbara Blackburn, a 64-yearold grandmother from Salem, Ore., who failed typing in high school, has set her third world speed typing record.

In 1981, she earned Guiness Book of World Records titles for standard typewriters with a speed of 150 words a minute for 50 minutes, and for computer keyboard typewriters at 170 words a minute.

This past October, using the software program, Mastertype, and a Dvorak keyboard, she broke her computer speed mark by typing 194 words per minute.

BRIDGE

James Jacoby

NORTH
♠ K 7
♥ Q J 9 8
♦ K J 5
♣ K 8 7 2

WEST
♠ J 10 9 4
♥ 7 2
♦ 10 8 6 4
♣ Q 9 3

EAST
♠ Q 8 5 2
♥ 3
♦ A Q 9 7
♣ A J 10 4

SOUTH
♠ A 6 3
♥ A K 10 6 5 4
♦ 3 2
♣ 6 5

Vulnerable: Neither
Dealer: South

West	North	East	South
			1♥
Pass	3♥	Pass	4♥
Pass	Pass	Pass	

Opening lead: ♠J

Here's a little problem for you, but you will need to be all thumbs, so you can cover the East and West cards and decide how you will play four hearts after the spade jack is led.

If this were being played 30-odd years ago, a reasonably competent declarer would draw trumps, ending in his hand, and then play a club to the king, losing to the ace. Later, when he played a diamond, he would lose two tricks in that suit, giving the defenders four tricks to set the contract. Our fictional declarer's concept was not bad. First, try to see if the club ace is well placed. If it isn't, fall back on a diamond guess and lean toward West's holding the diamond ace. (After all, if East has one ace, West is a little more likely to have the other. Of course there was and still is a better approach.

Declarer should win the spade king, play one high heart, play the spade ace, and trump a spade. Playing another heart to his hand draws the defenders' last trump. Now a diamond is the winning play. True, declarer will still have to guess whenever the diamond queen and ace are split between East and West. Should declarer guess wrong in that event, East can win the trick and put West on lead with the other diamond to lead through dummy's club king.

(NEWSPAPER ENTERPRISE ASSN.)

Revival

Daniel Vestal, preaching

Ralph Gibson, music

First Baptist Church
Snyder
March 24-28
12:00-1:00 p.m. Noon Bible Study
Evening Services 7:00 p.m.

Ted Bigham
Photography
573-3622

THE HAIR STATION
573-0885
HOURS
7 AM to 7 PM Mon.-Sat.

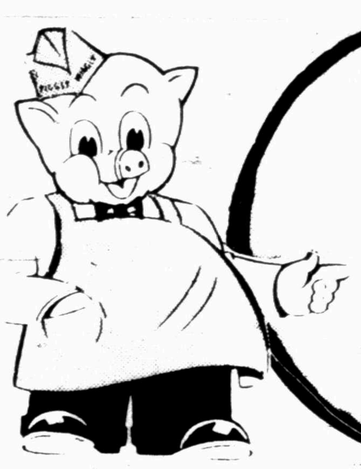

OPEN
24 Hours
a Day

FASHION HEADQUARTERS FOR CASTER

Free Gift Wrapping
No Service Charge On Layaways

Large Group
Ladies' Sandals
$6.99 to $32.99

Ladies' Coordinates
Cotton & Twill
By Donkenny
Split Skirt . . . . . $20 to $30
Slacks . . . . . $20 to $26
Sweaters $20.00
Blouses . . . . . $16 to $25
Crop Pants $22.00
Skirts $20.00
Knit Tops $14.00

Vanderbilt
Cologne Set
$12.00

Boys' Red Goose
Dress Shoes
$16.99 to $29.99

Tall Man Short Sleeve
Dress & Knit Shirts
$20.00 to $25.00

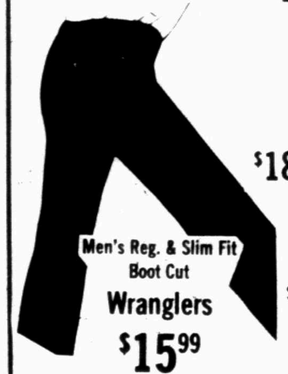

Men's Reg. & Slim Fit
Boot Cut
Wranglers
$15.99

Junior OP
Tops, Shorts, & Crop Pants
Tops $18 to $24
Shorts $16 to $22
Crop Pants $17 to $33

Men's
OP Sport Shirts
$20.00 to $27.00

Men's
OP Casual Pants
$27.50 to $36.00

Men's Short Sleeve
Buckhide Jump Suits
$17.99

Women's Panties
6/$6.50

Ladies' Coordinates
100% Polyester
By Ko Ko Knits
of California
Skirts . . . . . $17 to $23
Long & Short Sleeve Jackets . . . . . $30 to $35
Blouses . . . . . $18 to $22
Slacks . . . . . $20 to $22

Men's Munsingwear
Golf Coordinates
Shirts $18.00 to $23.00
Pants $30.00

Toddlers to 14
Girls Dresses
14.99 to 27.99

Boys' 4-7, 8-20 & Student
Dress Slacks
$10.00 to $17.99

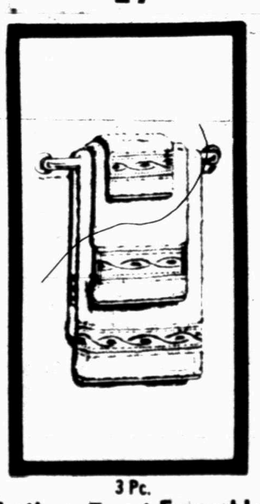

3 Pc.
Mystique Towel Ensemble
Bath $5.99
Hand $3.99 Wash $2.19

ANTHONYS
3210 College Hours 8:30am - 9:00pm

PUBLIC NOTICE

Pursuant to the Gas Utility Regulatory Act, Lone Star Gas Company hereby gives notice of the Company's intent to implement a new schedule of rates effective March 29, 1985 to be charged for natural gas service to residential and commercial customers in the environs area (outside incorporated limits) of Snyder, Texas.

The rate schedule, which is already in effect for customers within the city limits, is expected to furnish a 3.99 percent increase in the Company gross revenues in the environs of Snyder, Texas.

The Company proposes a change in the main line extension rate, also.

A statement of intent has been filed with the Railroad Commission of Texas and is available for inspection at the Company's business office located at 1712 27th Street, Snyder, Texas.

Any affected person desiring to contest such changes in rates can file a complaint with the Director of the Gas Utilities Division, Railroad Commission of Texas, 55 North - I.H. 35, Austin, Texas, 78711.

LONE STAR GAS COMPANY

THE BORN LOSER ©by Art Sansom

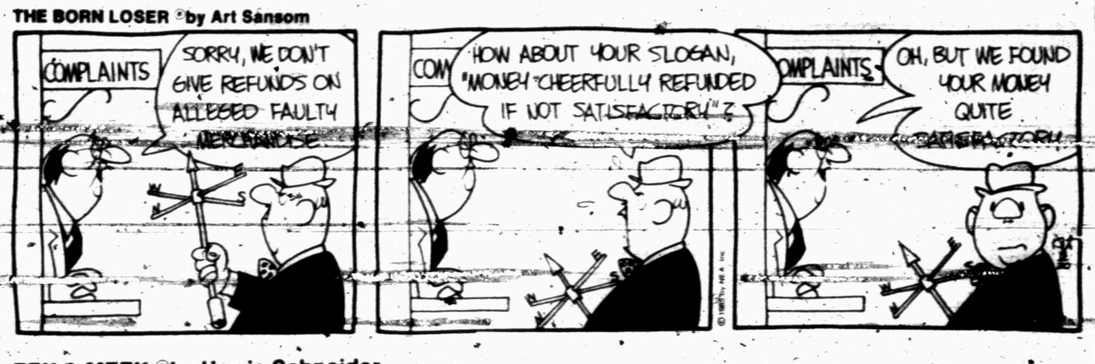

FRANK AND ERNEST ©by Bob Thaves

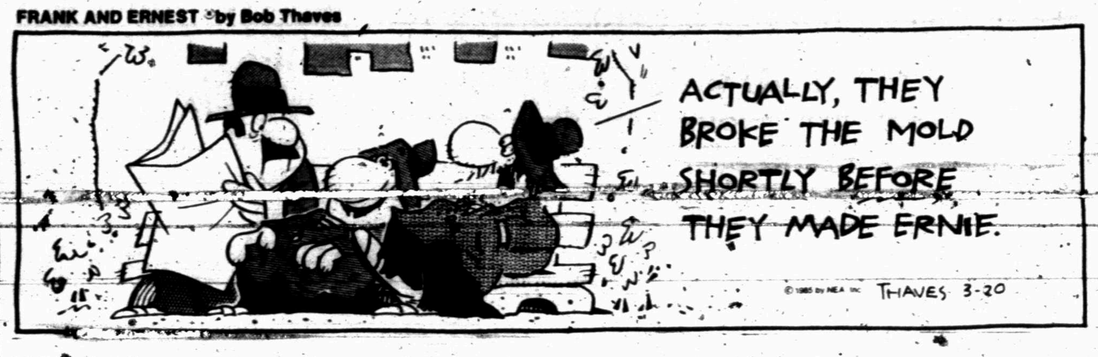

EEK & MEEK ©by Howie Schneider

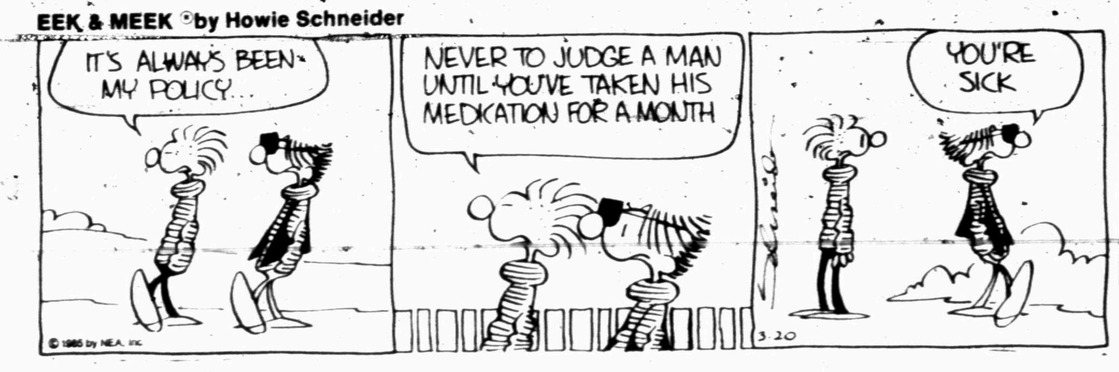

LEVY'S LAW ©by James Schumeister

FLASH GORDON ® By Dan Barry

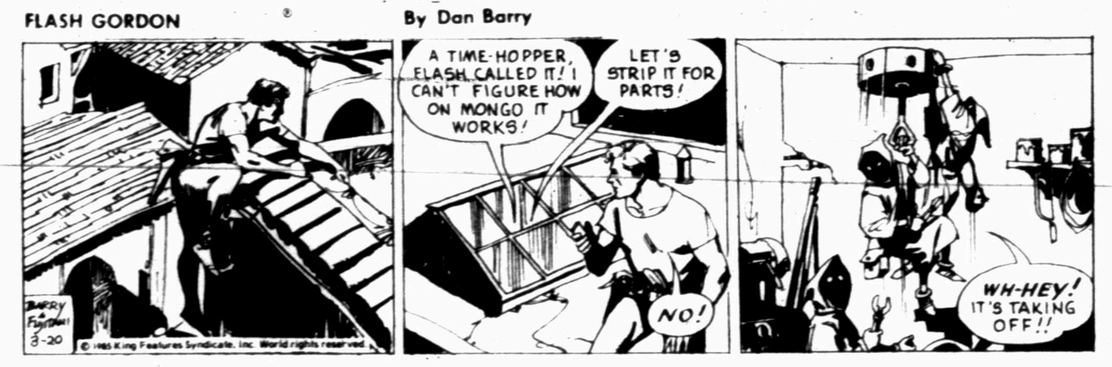

WINTHROP ©by Dick Cavalli

Barney Google and Snuffy Smith By Fred Lasswell

BUGS BUNNY ©by Warner Bros.

BABYMAN™ by Don Addis

ALLEY OOP ©by Dave Graue

SNAKE TALES™ by Sols

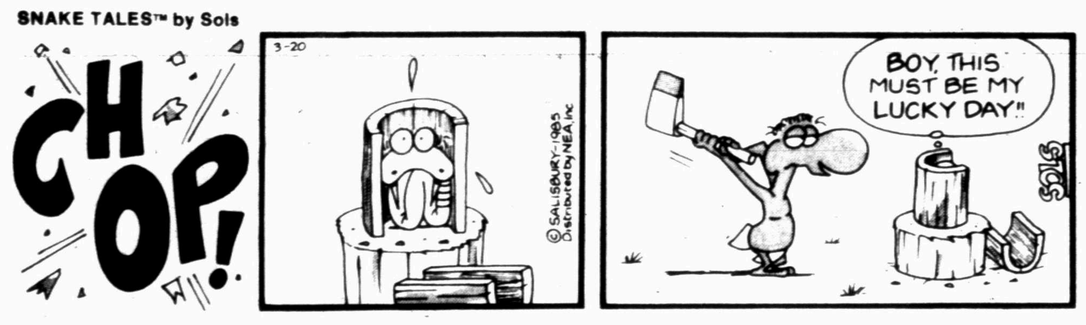

CAPTAIN EASY ©by Crooks & Casale

PUZZLE NEA

ACROSS

1 Time zone (abbr.)
4 Shade of tan
9 Foot
12 Amazon tributary
13 Reddish dye
14 I (Ger.)
15 Breed of dog
16 Paradises
17 For
18 Auto failure
20 Follow
22 Sixth sense (abbr.)
24 School organization (abbr.)
25 Greek letter
28 Baseball events
30 Young lady (Fr., abbr.)
34 Commerce agency (abbr.)
35 College group
36 Waters (Fr.)
37 Debatable
39 Oven
41 Here (Fr.)
42 Atomic number (abbr.)
43 Patron saint of sailors
44 Tennis equipment
45 Boat gear
47 Mrs., in Madrid (abbr.)
49 Swedish coin
52 Cut at an angle
56 Jesus monogram
57 Cowboy gear
61 Martini ingredient
62 Spanish article
63 Bay window
64 College degree (abbr.)
65 Harem apartment
66 Nostrils
67 Mayday signal

DOWN

1 Smoker's item
2 Sail fast
3 Labels
4 Ship part
5 Mortar tray
6 Chemical suffix
7 Relatives
8 Map within a map
9 Small fruit seeds
10 Light tan
11 Footwear
19 Electrical engineer (abbr.)
21 Mention
23 Prepare for buss
24 Old Testament book
25 Cotton fabric
26 Highlander
27 Image
29 Dog's wagger
31 Reclined
32 Clare Boothe
33 Departure
38 Australian mahogany
40 Standards
46 Moses' brother
48 Sloth
49 Metric unit
50 Red (comb. form)
51 Thessaly mountain
53 Overturns
54 Reverberate
55 Warm colors
58 Retirement plan (abbr.)
59 Ventilate
60 Golfing aid

Answer to Previous Puzzle

L	E	G	S		L	E	T	T		I	N	N
O	M	I	T		L	E	E	R		C	E	E
L	I	L	Y		A	L	L	Y		E	M	S
A	T	T		A	M	Y		P	E	S	O	S
		E	R	I	A		I	S	E			
W	A	D	E	D		D	R	I	L	L	E	D
H	O	G	S		L	E	A	N		I	N	A
I	N	E		L	A	W	N		L	E	V	I
T	E	D	I	O	U	S		L	A	D	Y	S
			A	D	D		I	I	I			
L	Y	I	N	G		I	N	T		I	N	C
I	E	R		I	N	C	A		L	A	I	R
C	A	M		N	E	O	N		O	G	E	E
E	R	A		G	O	N	E		T	O	L	E

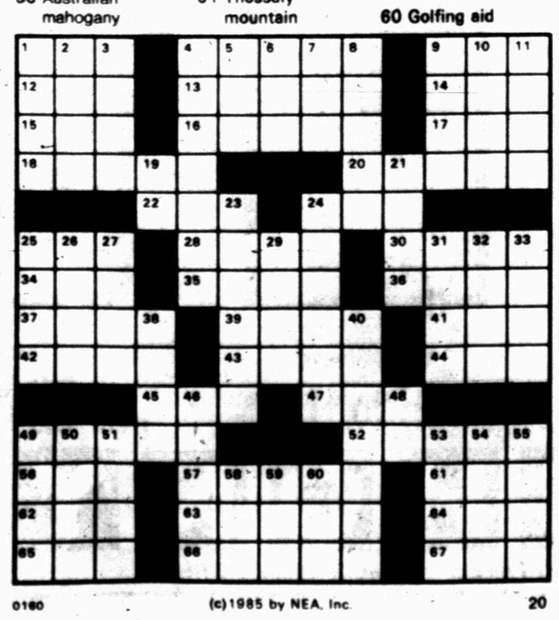

0160 (c)1985 by NEA, Inc. 20

By Dean Young & Mike Gersher

BLONDIE

KIT 'N' CARLYLE ©by Larry Wright

MR. MEN™ AND LITTLE MISS™ by Hargreaves & Sellers

LAFF-A-DAY

"Scalpel — clamp — Cadillac — er — sponge."

DENNIS THE MENACE

"JUST TELL HIM I WAS A NAUGHTY BOY AND I CAN'T PLAY WITH ANYONE TODAY."

Texas Briefs

Pro-life group delivers film

AUSTIN (AP) — Pro-life lobbyists believe "The Silent Scream" — a film showing a fetus during an abortion — will push Texas lawmakers to support tight restrictions on abortion.

Videotapes of the film were distributed to all legislators Tuesday as part of the California-based Crusade for Life's effort to get it in the hands of all lawmakers in the nation.

Rockdale Rep. L.B. Kubiak, sponsor of the abortion regulation bill, said the film leaves no doubt as to what happens during an abortion.

"There is something alive in there. It's not just a blob," he said.

The film uses ultrasound technology to show the abortion. Dr, Bernard Nathanson, a former abortion rights activist, narrates the 28-minute film. At one point he says the doctors "remove the head piecemeal."

President Reagan has called "The Silent Scream" a powerful lobbying tool that could convince Congress to "move quickly to end the tragedy of abortion."

Tuition hike tentatively approved

AUSTIN (AP) — A bill that would double the cost of college tuition for Texans and add $200 million to the state's ailing budget got the House's tentative approval.

The bill by Rep. Wilhelmina Delco, D-Austin, would raise tuition for all students attending Texas colleges and universities. The measure faces another House vote before moving on to the Senate.

"Texas has had a long history of offering many opportunities for education regardless of socio-economic conditions. We tried to be fair and equitable in terms of clear financial crisis," said Mrs. Delco, chairman of the House Higher Education Committee.

Gov. Mark White said he hadn't seen the bill but would support it if a "sufficient number of dollars for otherwise qualified economically disadvantaged students" was included.

Mrs. Delco's bill would earmark 25 percent of the money gained through tuition for need-based scholarships and emergency loans. Of the 25 percent, not less than 5 percent can be allotted for emergency loans, she said.

Bill would allow earlier start

AUSTIN (AP) — Senators have approved a bill that would allow public schools to open prior to Sept. 1, and House members have tentatively approved a measure that would double the cost of a marriage license to $15.

The marriage license fee has not been raised since 1977, said the bill sponsor, Rep. J.W. "Buck" Buchanan, D-Dumas. An amendment would authorize county commissioners to use license money to finance family violence centers.

The education reform law passed in special session last summer prohibits school from starting prior to Sept. 1, but Sen. Kent Caperton said Tuesday, "There has been a lot of complaining in some districts that we're taking away local decisions."

Caperton, D-Bryan, said some districts, especially in college towns, would like "to start a few days early." His bill repealing the Sept. 1 provision was sent to the House on a 26-0 vote.

City council approves settlement

HOUSTON (AP) — After eight years, Billie Ruth Webster has finally seen an end to the legal battle that began when her teen-age son was fatally shot by police.

"I'm pleased this is finally over," Mrs. Webster said Tuesday after City Council approved a $428,000 settlement ending a lawsuit over her son's death. "You can't put a price tag on a 17-year-old's life, but I'm satisfied with the settlement."

Randall Alan Webster was shot Feb. 8, 1977, after a high-speed chase that started when he allegedly stole a van in southeast Houston. The shooting was the basis of a made-for-television movie, "The Killing of Randy Webster."

Mrs. Webster and her husband, John,, filed a civil suit against the city after learning police had planted a "throw down" gun near their dead son's body.

Mrs. Webster accepted the settlement offer last week.

Police claimed officer Danny Mays shot Webster after two other policemen, J.T. Olin and Norvel Holloway, warned that the teen-ager had a gun.

But a federal grand jury was convened after investigators learned the .22-caliber handgun found near Webster had been listed as destroyed evidence from a police property room.

Mays and Holloway were convicted in 1979 of conspiring to plant the gun and of lying about it to a grand jury. Each was sentenced to five years' probation.

Earlier this year, city attorneys began negotiating a settlement with Mrs. Webster, saying they feared the city would be assessed a larger judgment because the two officers had declared bankruptcy.

He said Mrs. Webster should receive the payment within two weeks.

Mercernary is held in slaying

BRYAN, Texas (AP) — A man who advertised himself as a mercenary has been charged with capital murder in the shooting of a Bryan woman and has given Florida investigators statements about two shootings there, authorities said.

John Wayne Hearn, 39, a former Marine with home addresses in Atlanta, Ga., Columbia, S.C., and Gainesville, Fla., was arrested by Brazos County authorities in Huntsville Friday. He was held without bond Tuesday in the Brazos County Jail in the murder of Sandra Black.

Hearn has given statements in two Florida killings, said Florida's Bradford County Sheriff Dolph Reddish. The killings took place in January and February, Reddish said.

Mrs. Black was shot to death in her home on Feb. 21. Her husband, Robert Vannoy Black Jr., 38, was arrested March 10 for capital murder and also is being held without bond in Brazos County Jail. He is suspected of hiring Hearn to murder Mrs. Black, authorities said.

The 6-foot, 240-pound Hearn advertised in this month's "Soldier of Fortune" magazine as a mercenary. Brazos County Sheriff Ron Miller said he believes that Black contacted Hearn through the magazine advertisement.

Mrs. Black was shot twice in the head with a .22 caliber pistol. One of the Florida victims also was shot twice in the head with a similar weapon, Miller said. The other person died from a shotgun blast through a window.

Reddish said that others may be implicated in the killings, but Miller said Hearn has not named any others.

Miller said he will be presenting leads to federal authorities on Hearn's alleged role in activities involving guns, explosives and high risk assignments both in and outside the country.

Miller declined to comment on those activities, because he said it could hurt a federal investigation.

Miller said last week that Hearn belongs to an organized group whose members hire themselves out for high-risk assignments. Hearn gave himself up because he feared for his life if members of his organization discovered he was a suspect in the Black murder case, Miller said.

"It reads just like a television script," said Reddish of Hearn's statements concerning the killings.

Ohio Legislature okays compromise legislation

COLUMBUS, Ohio (AP) — The Ohio Legislature early Wednesday approved compromise legislation that lawmakers said could open some of the state's 69 closed savings and loan associations later in the day, and Gov. Richard Celeste quickly signed the measure.

Before signing the bill, Celeste called an 11 a.m. meeting with the chief officers of the savings and loans to discuss implementation of the measure.

"This is a great achievement, a vastly improved bill, by a very diverse group of us who refused to be stampeded," said Republican Sen. Paul Pfeifer, a member of the Senate Financial Institutions Committee.

Final legislative action came when the Senate approved on a 32-0 vote an amended bill that requires the thrift institutions to drop their private insurance and obtain federal deposit insurance. It had rejected a similar House-approved measure on a 16-16 tie early Tuesday.

Why Worry?
You Have The
BEST RATES,
BEST COVERAGE,
BEST SERVICE
Boren & West Ins. Agency
1822 26th 573-6911

Berry's World

"So what if they didn't take you in that last roundup. Hey — you're STILL a top mobster in my book!"

Revival/Bible Study
"Bring Jesus Back Into Your Life."
March 24-27
Services
Sunday 10:55 a.m. & 7:00 p.m.
Mon.-thru Wed.
Breakfast Service 7:00 a.m.
Evening Service 7:00 p.m.
Children & Youth - all ages
Sun. thru Wed. 6:00 p.m. with
Rev. & Mrs. Darrell Patterson
with
Rev. Harry Vanderpool
Choir Practice
Sun. thru Wed. 6:40 p.m.
Nursery Provided
First United Methodist Church
573-5416 2700 College

DIAL A DEVOTIONAL
573-8801

Do You Want Your City Councilman

ELECTED OR APPOINTED?

Why Not Elect A Proven Citizen?
David Hines

President, Hines Const.
Member, Church of Christ
Member, Snyder Lions Club
Past Chairman, Toys for Tots
Member, Snyder Country Club
Past Advisor, Scurry Co. Blood Drive
Past Director, Chamber of Commerce
Snyder Goldcoater
Member, API Society
1982 Winner, C.T. McLaughlin Award

Past Chairman, 4th of July Celebration
As Civil Improvement Chairman, Chamber of Commerce
1. Originated and installed fountain at coliseum (Tribute to oil and agriculture)
2. Originated Senior Center housing complex now under construction
3. Co-sponsored with Sgt. Cromwell project for National Guard to clean out Deep Creek

WRITE IN DAVID HINES
For City Council Place 1

Pol. Ad paid for by David Hines, Snyder, Tx.

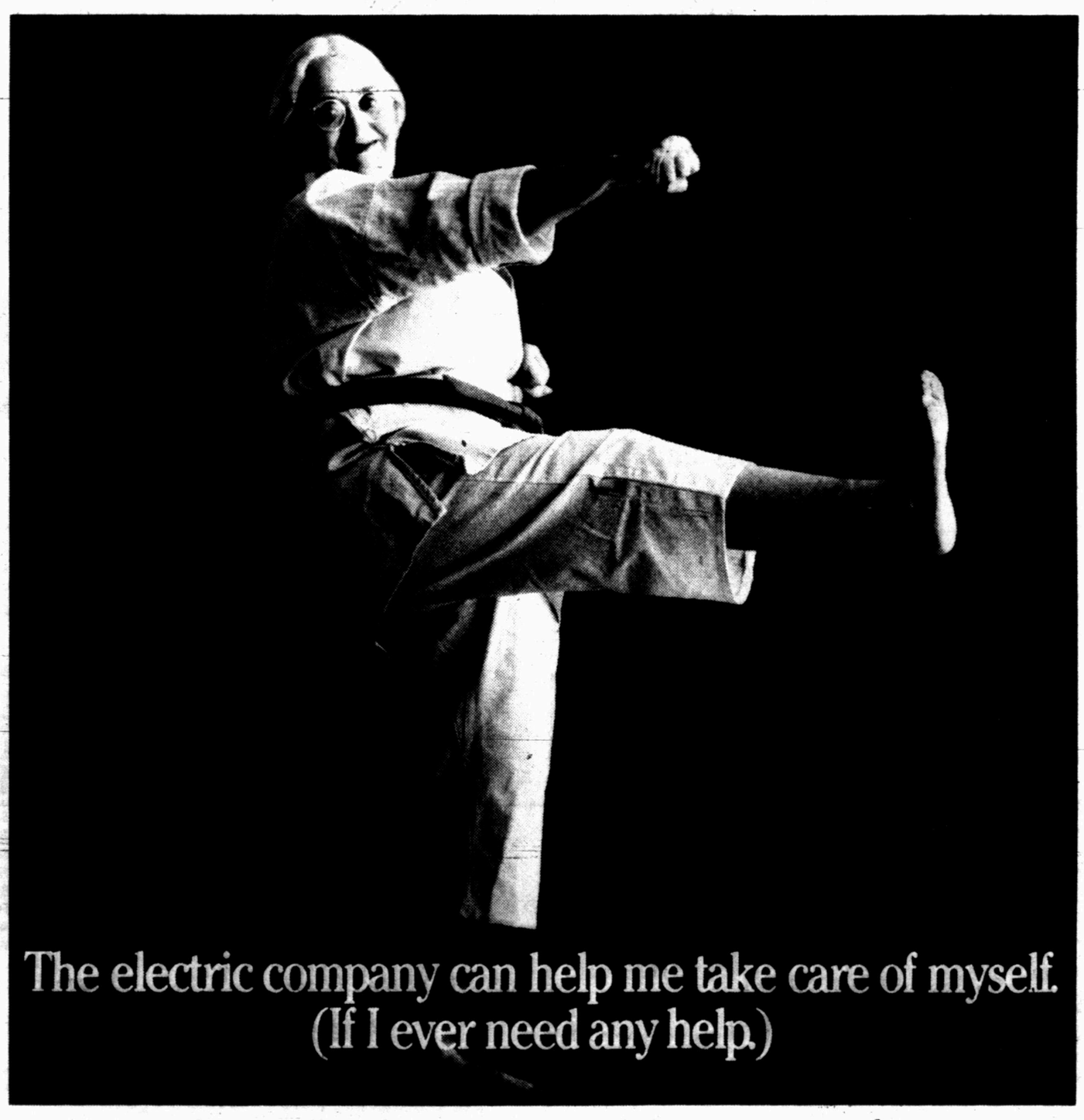

The electric company can help me take care of myself.
(If I ever need any help.)

Let's face it, at my age things can sneak up on you, and you may need some help. The electric company understands that.

That's why they'll arrange it so your bill payment can wait until your social security check arrives.

And their Special Friend Program makes sure someone doesn't overlook monthly bills. There's even a program to help provide essential energy services in a real emergency.

Right now, I don't need all this help to take care of myself. But I get a kick out of knowing it's there.

Texas Electric Service Company
A Division of Texas Utilities Electric Company

We've got lots of ways to help.

Dollar plunges, gold soars

NEW YORK (AP) — Fighting in the oil-rich Persian Gulf and fears that the closing of 70 Ohio savings and loans could rekindle inflation helped push up the price of gold and dump the dollar to its biggest one-day slide in 14 years, traders and analysts said.

Analysts also attributed the change of fortunes for gold and the dollar to huge budget and trade deficits and rising oil prices.

The Federal Reserve Board said its measure of the dollar against the currencies of 10 other industrial countries plummeted 2.39 percent on Tuesday, dropping it 5.54 percent from the all-time high reached Feb. 25.

The one-day fall was the largest daily decline in records that go back to Jan. 1, 1971. It eclipsed the 2.01 percent drop of Aug. 12, 1981, another period in which the dollar was retreating after earlier major gains.

The British pound rose nearly three cents against the dollar in London on Tuesday, climbing to $1.1360 from $1.1062 late Monday. Later in New York, sterling surged to $1.1615 from $1.1160 late Monday.

Despite its steep slide, the dollar still is 2.73 percent higher than at the end of 1984 and 81.31 percent higher than when the 1980s began, and traders are skeptical about whether it will fall further.

On the New York Commodity Exchange, gold bullion for current delivery rocketed up $35.70 to close at $339 an ounce on Tuesday, the highest finish since the $340 of Nov. 23, 1984. Gold stood at a 5½-year low of $282 an ounce on Feb. 25.

"It seemed to be always a one-way market," said Gary Dorsch, a foreign currency analyst at Oppenheimer Rouse Futures Inc. in Chicago.

Traders said the movements resulted largely from concern over Gov. Richard Celeste's closing of 70 Ohio savings and loan associations Friday after one disclosed potential losses from investments in a collapsed Florida securities firm.

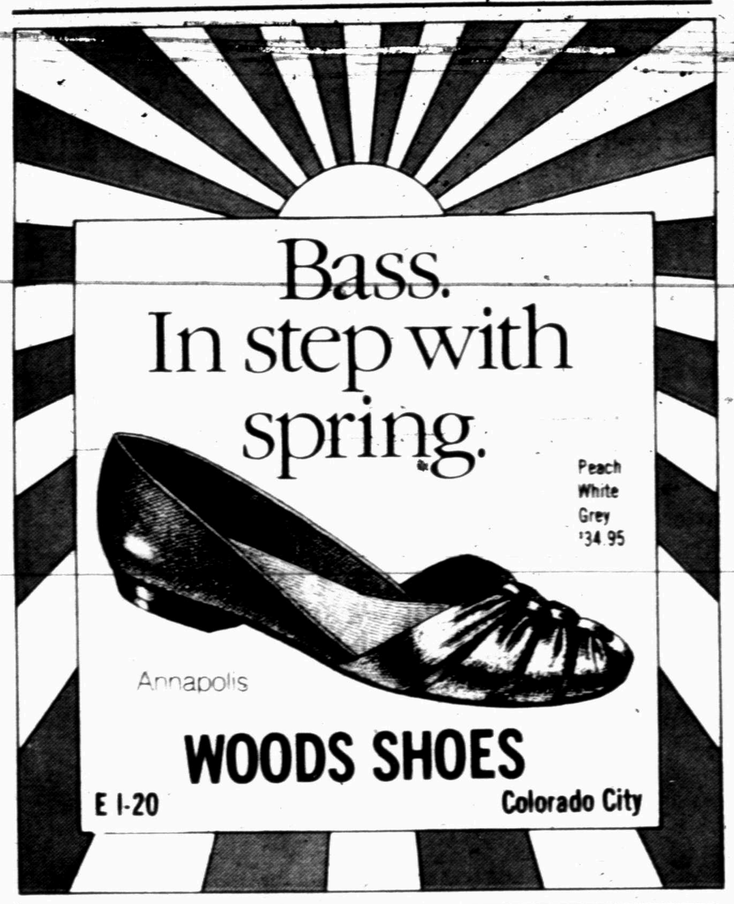

Astro-Graph

By Bernice Bede Osol

March 21, 1985

Friends who have been lucky for you in the past will be even more fortunate for you in the year ahead. Maintain good relationships and stick close to "winners."

ARIES (March 21-April 19) Even though you may suffer some minor disappointments today, all should work out well for you in the long run. Don't let your hope and faith waver. Major changes are in store for Aries in the coming year. Send for your Astro-Graph predictions today. Mail $1 to Astro-Graph, Box 489, Radio City Station, New York, NY 10019. Be sure to state your zodiac sign.

TAURUS (April 20-May 20) You'll derive more enjoyment today from things you do from your heart, rather than from your head. Let your compassion rule your actions.

GEMINI (May 21-June 20) Try to keep your social life separate from your business affairs today. This is not a good time to try to swing a big deal over a friendly lunch.

CANCER (June 21-July 22) Your possibilities for success look good today, even though you might be saddled with a reluctant ally. Rely only on yourself and not others.

LEO (July 23-Aug. 22) Your judgment is good today and your ideas should be implemented promptly. Do not subtract from your possibilities with delays.

VIRGO (Aug. 23-Sept. 22) Joint ventures could prove to be a source of profit for you today, provided they're not outlandish or too risky. Let your prudent judgment prevail.

LIBRA (Sept. 23-Oct. 23) When making important decisions today, consider the big picture. Once you have a comprehensive view, you'll see how the minor details fit.

SCORPIO (Oct. 24-Nov. 22) Putting out additional effort or doing special favors today for people who can help you with your career could pay off in a large bonus at a later date.

SAGITTARIUS (Nov. 23-Dec. 21) Be careful whose counsel you heed today. There's a chance a well-meaning friend might cost you money because of his poor advice.

CAPRICORN (Dec. 22-Jan. 19) A situation you've been dubious about is about to take a profitable turn. Gains are now likely where you expected losses.

AQUARIUS (Jan. 20-Feb. 19) Do not let petty thoughts invade your thinking today. Much good can come into your life now if your attitude is generous and forgiving.

PISCES (Feb. 20-March 20) Your chances for personal gain are exceptionally keen today. Be alert for opportunities that could add to your resources in a rather large way.

(NEWSPAPER ENTERPRISE ASSN.)

Dear Abby

Husband Gives Wife Broken Heart for Valentine's Day

By Abigail Van Buren

© 1985 by Universal Press Syndicate

DEAR ABBY: I'm terribly upset because my husband forgot Valentine's Day. I used to drop subtle hints before my birthday, anniversary, etc., but it never did any good, so I started to come right out and ask him to please remember me. Even that didn't help.

The week before Valentine's Day I reminded him that I would just love a card, a rosebud or some cute earrings. I reminded him again the day before, but the next day when I gave him his Valentine's Day gift, he just stared at me stupidly and said, "Gee, I guess I should have gotten you something, huh?"

The same thing happens every birthday and anniversary. Last Mother's Day was my first (our baby is 6 months old), so the day before, I told my husband I'd like a card, breakfast in bed, or just being able to sleep in while he looked after the baby. I would have been thrilled with any one of these gifts, but I got nothing. Instead he went bowling.

I am so disappointed when he forgets. I end up crying myself to sleep. Do you have any suggestions?

HURT IN ALBANY, ORE.

DEAR HURT: Face it, you are married to a thoughtless, insensitive man. He doesn't forget—he cares nothing for sentiment, and refuses to put himself out to please you.

You can't change anyone but yourself, so accept these glaring deficiencies in the man you loved enough to marry. Expect nothing, and you'll not be disappointed. And concentrate on his good qualities—if you can find them.

* * *

DEAR ABBY: In response to "Seeing Reality," who suggested that only family members (no in-laws) be included in family portraits owing to the fact that divorce is epidemic nowadays:

We have a family friend who faced an expensive family portrait with an eye to the future. The portrait was to include the father and mother, their four daughters and a new son-in-law, seated in a garden.

The new son-in-law was strategically placed on the end. After the divorce (which was apparently anticipated), the son-in-law was easily brushed and oiled into a bush, and the expensive portrait now proudly hangs, showing the family as it is today.

FACING REALITY

DEAR FACING: That's what I call giving a new son-in-law the brush—literally.

* * *

DEAR ABBY: Your answer to "Mother of the Groom" was totally off-base. You said the stepmother should not have been in the receiving line at all.

Abby, in some cases, a stepparent most certainly should be in the receiving line. Some stepparents play an important role in the stepchild's life. Questions such as "How long has the stepfather been remarried?" and "With whom do the children live?" were not answered in the letter. The relationship between the stepparent and the child or his or her new spouse must also be considered.

It's their wedding, and they should have a say in the matter.

STEPPARENT-TO-BE

DEAR STEPPARENT-TO-BE: I agree, the circumstances can make all the difference in the world. In this case, the parents of the groom had a bitter divorce, after which the father promptly married his girlfriend, who had been waiting in the wings for some time. These facts should have been included in the letter but were not.

In my eagerness to stay within the space allotted for my column, it's often necessary to cut the original letter to the bone. Or sometimes a local editor cuts a letter, eliminating some important facts.

In this case, it was I who cut the guts out of the letter, omitting some pertinent facts. Many readers wrote to complain. They were right.

* * *

(Problems? What's bugging you? Unload on Abby, P.O. Box 38923, Hollywood, Calif. 90038. For a personal reply, please enclose a stamped, self-addressed envelope.)

1985
EARLY BIRD SWAP MEET

MARCH 22 - 24, 1985
12:00 Noon FRIDAY To 12:00 Noon SUNDAY
Held In The Scurry County Coliseum Agriculture Complex
East Hwy. 180/Snyder, Texas
Sponsored by the Big Spring Region AACA

- R.V. hookups available on grounds Fri. Sat. Sun./$4.00 per night
- All food served at inside concession stand
- Motels & Restaurants within walking distance

SWAP SPACE
Open Air—$10.00
Under Cover—$12.00
Swap Building—$15.00
SPACE SIZE 12'X20'

- Paved area and inside spaces
- Public Free
- Clean rest rooms
- No vendors set up until 12:00 noon Friday

CARS - PARTS & ANTIQUE RELATED ITEMS, PLEASE
For more information contact - Moody Thomason, Rt. 2/Box 174/Snyder, Texas 79549/ (915) 573-8938

SENCO
Air Powered Nailers and Staplers

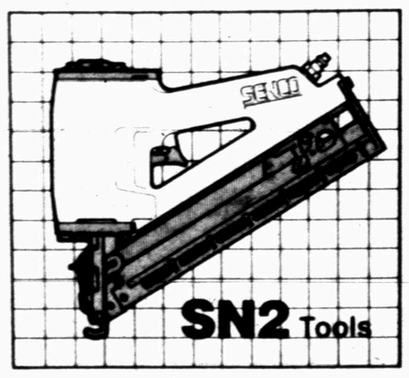

Framing
Sub-flooring
Sidewall Sheathing
Roof Decking
Plywood Siding

Suggested Retail Price $445.00
Sale Price $378.25

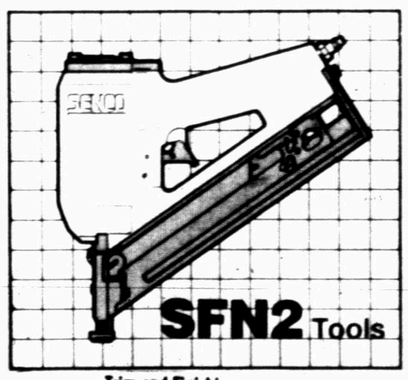

Trim and Finishing

Suggested Retail Price $431.00
Sale Price $366.35

SENCO
Air Powered Nailers and Staplers

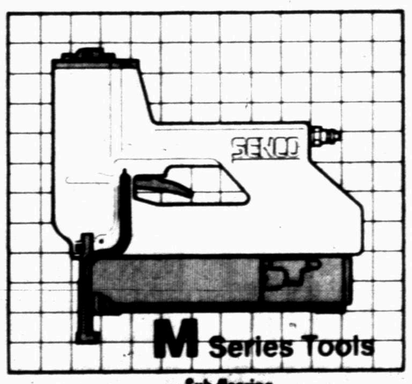

Sub-flooring
Roof Sheathing
Sidewall Sheathing
Fiberboard Wall Sheathing
Gypsum Wall Sheathing
Floor Underlayment
Wood Roof & Wall Shingles
Wood Shakes

Suggested Retail Price $368.00
Sale Price $312.80

10% off on all nails and staples through April 1st
T.E. SHELBURNE & SON, INC.
1611 25th St. 573-6359 [Ask For Harry]

Gas leak report won't assess blame

DANBURY, Conn. (AP) — A report on a gas leak that killed more than 2,000 people in Bhopal, India, will not assess blame but will explain how the methyl isocyanate leaked from a tank at a Union Carbide Corp. plant, the company chairman says.

Union Carbide said it would release the report today based on its internal investigation of the leak, which occurred Dec. 3.

Carbide Chairman Warren Anderson has said the document "will be a technical report that relates to what happened in that tank." He said the report would not try to assess blame for what is considered one of the worst industrial accidents in history.

Union Carbide is being sued for billions of dollars in connection with the Bhopal leak.

The company report was to be given to the U.S. Environmental Protection, Agency and to state agencies investigating safety at Carbide's Institute, W.Va., plant.

The company's Institute plant is the only other Carbide facility that produces methyl isocyanate, an ingredient in the manufacture of pesticides.

Baseball roundup...

Cincinnati Reds shaping up

By The Associated Press

Eric Davis and Eddie Milner are competing for the Cincinnati Reds' center field job, and so far there hasn't been much to choose between them in spring training.

After a 2-for-4 performance in Tuesday's 5-2 exhibition victory over the St. Louis Cardinals, Davis is batting .370. Milner went 0-for-4 to boost his spring training average to .364, and contributed an RBI single and stolen base to the Reds' offense Tuesday.

"I'm trying to get the best production I can," Milner said. "I'm fighting for a job. I'm going to show them everything I've got."

Meanwhile, Cincinnati right-hander Mario Soto, who has historically struggled in spring training, gained his third victory in three spring-training outings with his longest and best performance so far. Soto allowed just two hits in four innings, striking out three and not giving up a walk.

"Soto is in midseason form," Cincinnati Manager Pete Rose said. "He's throwing the ball really well. They tell me he usually doesn't have good springs. That's not true this year."

The Reds as a team are having a good spring as well. Their victory Tuesday was their fifth in a row, giving them an 8-2 record.

"You like to win, and that's what we're doing," Rose said. "We're getting good pitching and good hitting. When you get that combination, you usually win."

The only other team with a better record in spring training is the Toronto Blue Jays, who are 10-1 following Tuesday's 4-1 triumph over the Pittsburgh Pirates.

Mitch Webster's two-run triple with one out in the eighth inning broke a 1-1 tie for Toronto, and he later came home on a single by Fred McGriff. Jesse Barfield homered for the Blue Jays' first run and Jim Morrison's homer accounted for Pittsburgh's only score.

In other exhibition baseball action, Dave Collins tripled home two runs to key a six-run fourth inning to pace the Oakland A's to a 6-5 win over the San Diego Padres, who have the worst record among major league teams thus far at 1-7.

Mike Norris, who hadn't pitched for Oakland since August 1983 because of injuries and drug problems, made his spring debut, allowing one run in the ninth inning.

Lynn Jones broke a tie with a solo homer in the eighth inning off Jack O'Connor to give Kansas City a 3-2 victory over Montreal. Steve Jeltz broke a 1-1 tie with a run-scoring triple, and he came home on shortstop Ozzie Guillen's error in the fifth inning as Philadelphia went on to beat the Chicago White Sox 3-2.

Geoff Zahn, Doug Corbett, Luis Sanchez and Pat Clements blanked the Chicago Cubs on five hits and Brian Downing knocked in two runs in California's 8-0 victory. Rob Deer hit a three-run homer and Dusty Baker drove in two runs with a double and a sacrifice fly as San Francisco defeated Seattle 8-3.

Gerald Perry's homer triggered a three-run third inning by Atlanta that lifted the Braves to a 3-2 triumph over Texas. Tom Brunansky's two-run homer in the sixth snapped a 3-3 tie and gave Minnesota a 5-3 victory over Boston.

Gary Carter and Darryl Strawberry hit consecutive home runs in the third inning, lifting the New York Mets to an 8-2 decision over the New York Yankees. Ed Romero and Mark Brouhard each had two-run doubles to lead Milwaukee to a 7-5 victory over Cleveland.

Phil Garner, Craig Reynolds and Terry Puhl had three hits each to pace Houston's 21-hit attack in a 14-3 romp over Detroit. Bob Welch, Larry White and Bobby Castillo combined to check Baltimore on five hits in the Los Angeles Dodgers' 3-1 victory over the Orioles.

Exhibition baseball

By The Associated Press

Tuesday's Games

Cincinnati 5, St. Louis 2
Atlanta 3, Texas 2
Houston 14, Detroit 3
New York Mets 8, New York Yankees 2
Philadelphia 3, Chicago White Sox 2
Toronto 4, Pittsburgh 1
Los Angeles 3, Baltimore 1
Kansas City 3, Montreal 2
Minnesota 5, Boston 3
California 8, Chicago Cubs 0
San Francisco 8, Seattle 3
Oakland 6, San Diego 5
Milwaukee 7, Cleveland 5

Wednesday's Games

Cincinnati vs Los Angeles at Vero Beach
New York Mets vs. Philadelphia at Clearwater
Baltimore vs. Montreal at West Palm Beach
Detroit vs. Pittsburgh at Bradenton
Boston vs. St. Louis at St. Petersburg
Atlanta vs. Kansas City at Fort Myers
Houston (ss) vs. Minnesota at Orlando
Chicago White Sox vs. Toronto at Dunedin
Milwaukee vs. Chicago Cubs at Mesa
California vs. San Francisco at Scottsdale
San Diego vs. Seattle at Tempe
Cleveland vs. Oakland at Phoenix
Houston (ss) vs. New York Yankees at Fort Lauderdale

Tigers set for Midland

MIDLAND -- Snyder High School's ninth-ranked Tigers will take on Midland High here Thursday at 4 p.m.

The Tiger baseball team, 10-2 on the season, will play in Abilene next Monday, their final non-district game.

The defending 2-4A champions begin league play March 29 by hosting Fort Stockton.

Coach Albert Lewis indicated he would start senior pitcher Jimmy Cain against Midland. He said he plans to use Cain, Charles Bollinger and Justin Webb in the next two games.

Charges filed against Brown

LOS ANGELES (AP) - Pro football Hall of Fame member Jim Brown has been formally charged with one count each of rape, sexual battery and assault on a 33-year-old teacher who complained that he physically forced her to have sex with him and a companion, Carol Moses, on Feb. 19.

Deputy District Attorney Vivian Somoza said the charges were filed by Deputy District Attorney Sandra Buttitta in Municipal Court. Somoza will try the case, she said.

Brown is scheduled to appear in Municipal Court on Thursday morning for arraignment.

Pepitone arrested, arraigned

NEW YORK (AP) - Former major league baseball player Joe Pepitone was arraigned following his arrest Monday night on charges of possession of heroin, cocaine, Quaaludes and a loaded handgun.

Pepitone, 44 years old, who starred for the New York Yankees during a 12-year big-league career that ended in 1973, was arrested in Brooklyn after the car in which he and two other men were riding was stopped by police for allegedly running a red light.

Following his arraignment, Pepitone's bail was set at $15,000. He faces a prison term of 15 years to life if convicted.

AMA stand called 'emotional'

NEW YORK (AP) - The American Medical Association made "an emotional decision" when it called for a ban on boxing, says a doctor affiliated with the State Athletic Commission whose research shows no brain damage from knockouts.

Dr. Ben Derby, a professor at the New York Medical Center, joined commission Chairman Jose Torres, former light heavyweight champion, and other commission doctors in criticizing the AMA for its anti-boxing resolution.

Derby said CAT (computer assisted tomography) scans of the brains of 100 boxers who had suffered knockouts or technical knockouts "showed no pathological abnormalities."

Housden selected for all-star game

AUSTIN -- Carie Housden, a two-time All-District 2-4A selection for Snyder High School's Lady Tigers, has been chosen to participate in the Texas Girls Coaches Association All-Star Basketball Game.

Fourteen other girls, from Class 1 through 5, will join Housden on the North All-Star team for the July 13 contest.

Housden has a career total of 1,180 points and 717 rebounds in three years of varsity play. As a senior, she averaged 13 points and 8.4 rebounds a contest.

She was all-district both as a junior and a senior.

The 5-8½ post-forward is the daughter of Coach and Mrs. Ken Housden. She aided the Tigers to a 20-7 season record.

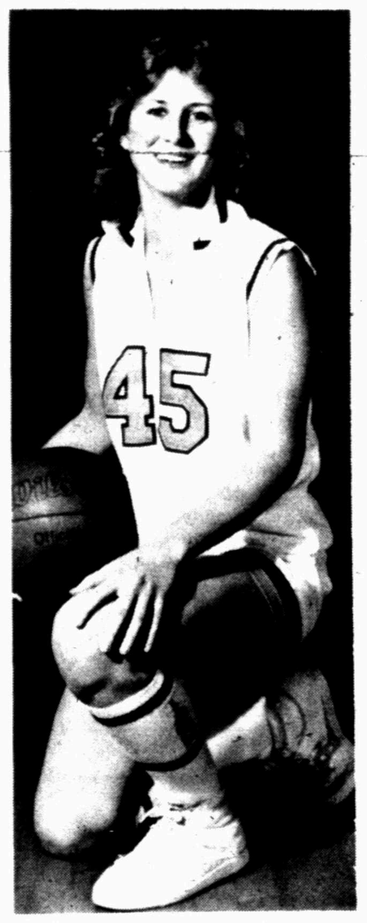

CARIE HOUSDEN
...selected for all-star game

Pitcher Warren Spahn set a major-league record for southpaws by winning 20 or more games in a season 13 times.

Overcoming height problem key for Tech, Loyola teams

By The Associated Press

Although Loyola of Illinois has to worry about stopping 7-foot All-America Patrick Ewing, Illinois Coach Lou Henson believes he is in for double trouble against Georgia Tech in Thursday night's other NCAA East Regional game.

"I've been staying up nights thinking about two 7-footers," Henson says, referring to 7-foot Yellow Jackets John Salley and Yvon Joseph, who actually is listed at 6-11. "Georgia Tech is huge, with a good inside attack, and they can intimidate."

Illinois, 26-8, the only one of six Big Ten schools in the NCAA postseason tournament to survive the first two rounds, faces Georgia Tech, 26-7, in the opener of the East semifinals at Providence, R.I. Top-ranked Georgetown, 32-2, meets Loyola, 27-5, in the second game.

Also on Thursday night, at the Midwest Regional in Dallas, Louisiana Tech, 29-2, takes on Oklahoma, 30-5, and All-America Wayman Tisdale, followed by Boston College, 20-10, against Memphis State, 29-3, which features All-America Keith Lee.

In the West Regional at Denver on Friday night, it's North Carolina State, 22-9, versus Alabama, 23-9, and St. John's, 29-3, against Kentucky, 18-12.

Also on Friday, Maryland, 25-11, tackles Villanova, 21-10, and North Carolina 26-8, faces Auburn, 22-11, in Southeast Regional semifinals at Birmingham, Ala.

Despite their height advantage, Georgia Tech players believes they will have a physical battle with the Illini.

"This game will be power versus power," Salley said. "It will have to be physical."

"The key to Illinois' press will be me and John, if we can move inside," Joseph added. "They can't guard us inside and outside. It will be a very physical game. If the refs let them, the big men will bang each other up. I like a loose game -- not dirty, but tough."

While Henson said he is losing sleep over Salley and Joseph, Georgia Tech's outside attack doesn't give him any relief.

Henson called Yellow Jackets guards Bruce Dalrymple and Mark Price "two of the best guards in the country."

Illinois counters the Atlantic Coast Conference champions up front with 6-9 Efrem Winters, 6-9 Anthony Welch and 6-8 Ken Norman, with Bruce Douglas and Doug Altenberger the guards.

In the Midwest doubleheader at Dallas, Louisiana Tech will continue its effort to rise from obscurity and the shadow of a successful women's program.

The Bulldogs were only seeded fifth among the original 16 Midwest Regional teams despite their gaudy record. But Tech crushed Pittsburgh 78-54 in the first round and breezed by Ohio State 79-67 to advance to the semifinals, while the highly touted Sooners had tough games with North Carolina A&T and Illinois State.

Gene Iba to replace Haller as Baylor basketball coach

WACO, Texas (AP) - Gene Iba of Houston Baptist will be the new head basketball coach at Baylor University, The Associated Press has learned.

Iba, who posted three consecutive 20-victory seasons as the second coach at Houston Baptist and took the team to the NCAA playoffs a year ago, will succeed Jim Haller, who resigned last month.

Iba, 43, a member of a prestigious basketball family, will be formally named as Baylor coach at 3 p.m. today by Athletic Director Bill Menefee at a news conference called by the Southwest Conference school.

A Baylor source told the AP Tuesday that Iba won out in a close battle with Don Eddy of the University of Texas at San Antonio.

Iba's teams are well drilled on fundamentals much like those of his uncle, Hank Iba, who turned Oklahoma State into a basketball power. His father, Clarence, coached at Tulsa and a cousin, Moe, coached at Nebraska.

Houston Baptist has already sent one coach into the Southwest Conference, Gerald Myers of Texas Tech.

Myers was the first coach of the Huskies. His Tech team won the SWC regular season and tournament titles this year.

Haller resigned after nine seasons at Baylor effective with the end of the season after a player hid a recorder in his windbreaker and taped a conversation.

In the tape, Haller gave the player permission to use a $172 meals expense check for a car payment. Haller admitted he violated NCAA rules and resigned.

The AP source said one of the biggest chores ahead of Iba was to keep the discontented team at Baylor on the campus. The Bears had as many five freshmen starters late in the year.

"He'll have to recruit the dormitory before he hits the recruiting trail on national signing day," the source said.

Iba has coached at HBU the past eight seasons and got the Huskies into the NCAA Playoffs last year for the first time.

The Huskies were 21-8 this year, their third straight 20-victory season under Iba. However, HBU lost to Mercer in the second round of the Trans America Athletic Conference and failed to make the NCAA playoffs.

Jordan shocks Lloyd

NEW YORK (AP) - When you've only won twice in 11 tries, it's time to change your game plan. Kathy Jordan did just that, and it worked to perfection.

Normally a serve-and-volley specialist, Jordan stayed on the baseline Tuesday and upset second-seeded Chris Evert Lloyd 6-2, 1-6, 6-2 in the $500,000 Virginia Slims Tennis Championships at Madison Square Garden.

"She really hit her backhand really well," Lloyd said after her first-round loss. "Usually she'll miss a few backhands. She sliced very well, served very well and didn't make any errors from the back of the court.

"She played a smart game and I give her a lot of credit for that."

Lloyd was the third seed to fall in this 16-player tournament - all in the bottom half of the draw. On Monday, No. 4 Wendy Turnbull of Australia and No. 8 Carling Bassett of Canada tumbled from this season-ending event.

Defending champion and top-seeded Martina Navratilova begins play tonight when she takes on Lisa Bonder. Other singles matches tonight send No. 6 Manuela Maleeva of Bulgaria against Pam Shriver and No. 7 Zina Garrison against Sylvia Hanika of West Germany.

This week-long tournament, the culmination of the year-long Virginia Slims Series, winds up Sunday with a best-of-five-sets final - unique in women's tennis - with $125,000 going to the winner.

Rossley fired

SAN ANTONIO, Texas (AP) - The San Antonio Gunslingers fired offensive coordinator Tom Rossley Tuesday, a spokesman confirmed.

Les Singleton, a spokesman for the United States Football League team, said the Gunslingers did not plan to issue a statement about Rossley's dismissal.

Rossley had served as the team's offensive coordinator for just four games. The Guns are 1-3 and have averaged only 200 yards offense per game.

Happy Birthday
Manuel Salazar

Tropic Aire
Heating and Air Conditioning
Service & Installation
24 Hr. Service
573-1356
Nights 573-7330
Call for Free Estimate
Check Our Prices
Before You Buy
Service On All
Brands Heating &
Air Conditioning
Jon Cheatham, Owner

We Buy Extra Clean
Late Model Used Cars
DENSON USED CARS
300 E. Hwy. 573-3912

FREE SPINAL EXAMINATION

Danger Signals of Pinched Nerves:
1. Headaches
2. Neck Pain
3. Shoulder Pain
4. Difficult Breathing
5. Lower Back Pain, Hip Pain, Pain Down Legs
SCHAFFER CHIROPRACTIC OFFICE
2112 Hickory St.
Colorado City
Most Insurance Accepted
728-5284
Free Exam Does Not Include X-Rays or Treatment
©CM

U.G.S.A. Girls
Softball Registration

Thursday 4-7 p.m.
Friday 4-7 p.m.
Saturday 10-12 & 1-3 p.m.
March 21, 22, 23
At Towle Park Barn
Fee $15
Age 7-20

Bring Parent & Birth Certificate.
Anyone interested in being considered as coaches & managers must apply at this time

FISH

Now is the time for Spring stocking Hybrid Bluegill, Channel Catfish, Fathead Minnows, Hybrid Grass Carp, Black Crappie
The Hybrid Bluegill will REACH the weight of 2½ to 3 lbs. We furnish your Hauling Containers.
We guarantee live delivery.
Delivery will be Saturday March 30, at the times listed for the following towns and locations.
Snyder-Upper Colorado Soil and Water Conservation District
Snyder Shopping Center
3423 Avenue T.
Snyder, TX. 79549
9:00-11:00 a.m.
915-573-0171
DUNN'S FISH FARM
P.O. Box 85
FITTSTOWN, OK 74842

Snyder's Business Service Directory

When You Need Work Done, Let The Professionals Do It For You!

BIG COUNTRY LAMINATING
Laminating equipment, supplies & service. Binders & Covers also available.
Contact Linda Sullivan, 573-9591.

J.T. ELECTRIC
OWNER: Tommy Pherigo
573-2125

COOPER APPLIANCE SERVICE & PARTS
Heating & Air Conditioning
Free estimates, best prices
25 years experience
573-6289

ELECTROLUX
SALES & SERVICE
SUPPLIES
Don Adams Laundry
2400 26th 573-9174
or 573-3747 after 6

WATERWELL SERVICE
Windmills & domestic pumps
Move. Repair. Replace.
Tommy Marricle 573-2493
Bennie Marricle 573-8710
Before 8 a.m. & after 6 p.m.

FOR ELECTRICAL WIRING
Call Ed Blocker
573-7578

DON McANELLY
Dirt Work Service
Yard. Driveway. Cleanup. Top Soil. Caliche. Blow Sand. 12 yd. Dump Truck & Backhoe.
FREE ESTIMATES. 573-3136

M&S DRILLING CO. INC.
Water well drilling
Pump Sales & Service
Call Ray Sorrells
573-8951

CALL TOM WADLEIGH
for door repairs and commercial or residential doors of all kinds, including electric openers.
573-2442

TAX PRACTITIONER
Experienced
Reasonable Rates
Messimer Tax Service
573-7526 2312 26th St.

CAN DELIVER
573-6630
*Top Soil
*Caliche
*Driveway Materials

573-5486

TWIN STAR PHOTO
1 Hr/Same day processing.
Passports and Photocopy.
4000 College Ave. 573-1457

let your words do the talking in the CLASSIFIEDS

573-5486 Run 5 Days, the 6th Day is FREE!

CLASSIFIED DEADLINE

4:00 p.m. Prior to Day of Publication
Sunday & Monday 4 p.m. Friday

NOTICE TO CLASSIFIED AD CUSTOMERS

All Ads are cash unless customer has an established account with The Snyder Daily News. Ads may be taken over the phone so that they may be processed but payments must be made prior to publication.

CLASSIFIED ADVERTISING
RATES & SCHEDULES
15 WORDS, MINIMUM

1 day per word	17¢
2 days per word	31¢
3 days per word	41¢
4 days per word	53¢
5 days per word	60¢
6th day	FREE
Each additional day 7¢ per word	
Legals, per word	17¢
Card of Thanks, per word	17¢

These rates for consecutive insertions only. All ads are cash unless customer has an established account with The Snyder Daily News.

The Publisher is not responsible for copy ommissions, typographical errors, or any unintentional error that may occur further than to correct it in the next issue after it is brought to his attention.

ERROR

The Daily News cannot be responsible for more than one incorrect insertion. Claims cannot be considered unless made within three days from date of first publication. No allowance can be made when errors do not materially affect the value of the advertisement.

All out of town orders must be accompanied by cash, check or money order. Deadline 4:00 Monday through Friday prior to any day of publication. Deadline Sunday & Monday, 4:00 p.m. Friday.

MISS YOUR PAPER?

Your Snyder Daily News should be delivered Monday through Saturday by 6:00 p.m.

Your carrier strives to give prompt service, but should your be missing...

please call
573-5486

Monday thru Friday
before 6:30 p.m.

Saturday
before 7:00 p.m.

ANNOUNCEMENTS 020

ADDITIONAL FOSTER Parents are badly needed. If interested, please attend orientation Friday, March 22 at 7:00 p.m. First United Methodist Church parlor.

BRING IN Or call us for the repair or refinishing of your clocks, lamps & furniture.
HOUSE OF ANTIEKS
4008 College
573-4422

INDEPENDENCE PROPANE & CARBURETION 5¢ off regular price per gallon, propane. Cash only 200 gal. minimum. No service charge. Rt. 2 Box 219. 573-0963 or 573-6670.

LOST and FOUND 070

Add-a-Bead Necklace lost at K-Mart or T,G&Y. Reward offered. 573-5786.

let your words do the talking
573-5486

PERSONAL 080

LIFT A FINGER. Report child abuse. 1-800-252-5400 toll free statewide child abuse hotline.

VEHICLES 090

1978 34' AVION Travel Trailer, center bath, rear twin beds, loaded, super nice with extras. 1981 Ford ½ Ton XLT Ranger Pickup, $5450. 573-7219 after 5 p.m. or come by 538 West 30th.

BILLS AUTO SALVAGE is now open. Late model used Parts. Chevy, Ford, Chrysler, Toyota, Datsun. East Hwy 180 at the Traffic Circle. 573-9569 or 573-9010 (nights).

78 CHEV. SILVERADO, all wanted options plus lots of chrome extras, good condition. 573-8376.

1975 CHEV C-60: Long wheel base, butane equipped, 4-speed w/2 speed rear end. Good for any type work usage. Was $3495, Now $2995. Wilson Motors, 573-6351, ask for Elliott.

1979 CHEVY LUV PICKUP: 4 cylinder, automatic, heater, blue vinyl bench seat, good condition. $2695. Wilson Motors, 573-6351, ask for Elliott.

66 CHEV. MALIBU, 2nd owner. Garaged. 75,000 actual miles. 283 ci. PS, PB, AT. Super clean. $3300. 573-2482.

1982 CHEVY IMPALA: Former Police vehicle, V-8 engine (305), blue vinyl interior, good work car. Was $2995, Now $2550. Wilson Motors, 573-6351, ask for Elliott.

1982 DATSUN Pickup for sale. Equity and take up payments. Also rabbits for sale. 573-7706.

1980 DATSUN PICKUP Highrise, chrome wheels, stereo w/equalizer, tool box and sunshade. 573-2190.

FOR SALE: 1984 Olds 98 Regency Brougham, 4-door, loaded, moon/sun roof, 17,000 miles. 1983 Chev 4x4 Pickup, dark blue, chrome wheels. 18' Hydro/Sport Bass Boat w/V6 Mercury 150 HP Motor, Mercury Trol Motor, Hummingbird Finder. Call 573-8961.

FOR SALE: 71 Corvette Stingray, new tires and brand new engine. 573-9056.

FOR SALE: 1979 Chev Caprice Classic, 2-door, new steel belted radial tires, new brakes, 54,000 miles, clean, cruise control, power steering and brakes. Phone 573-7761.

1974 F-250 PICKUP: 460 engine, automatic, locally owned, excellent first school Pickup. $1975. Wilson Motors, 573-6351, ask for Elliott.

FOR SALE: 78 Ford 9000 Truck and Trailer, good condition. See at Doyle's Engine Service.

FOR SALE: 1979 Ford Ranger XLT Pickup. $3100 or best offer. Call 573-2092 after 5 p.m.

FOR SALE: 1975 Olds Delta 88. Good condition. Runs good. $1000. Call 573-3971.

FOR SALE: 1976 Blazer 4x4, $2800. Call 573-9858.

1979 GRAND MERCURY Marquis. Fully loaded. AM-FM Cassette Player. 1-Owner. Nice & Clean. $4000 or make offer. 573-8155 or 573-2641.

1984 MERCURY MARQUIS Brougham. V-6, loaded, still under warranty. 8,000 miles. Excellent condition. Take up payments. 573-3862.

1977 MERCURY MARQUIS: locally owned, excellent condition, 351 engine w/-automatic, yellow vinyl interior, AC, AM/FM cassette. $2195. Wilson Motors, 573-6351, ask for Elliott.

1980 MERCURY MONARCH: good condition, V-6 engine, automatic, PS, PB, vinyl interior. Priced to sell, $3495. Wilson Motors, 573-6351, ask for Elliott.

1984 MINI-BRONCO XLT, loaded. Will sell at bargain. Can be seen at Royal Campgrounds, Hwy 84 Bypass.

75 OLDSMOBILE, good work or school car, $1500. Call 573-9943.

1977 THUNDERBIRD, good condition, clean, AM/FM 8-tract, tilt & cruise. 1972 Pontiac Convertable, excellent condition, loaded, like new. See at North College 66, 1701 College Ave. 573-0462. Monday-Saturday.

Classified Ads Call 573-5486

VEHICLE PARTS 091

BATTERIES, $23.50, 18 month warranty. 3701 College Avenue. Jester's Clean-up and Accessories Shop.

let your words do the talking
573-5486

MOTORCYCLE 110

FOR SALE: 1984 Honda V-30, 500cc Motorcycle. Low mileage. In excellent condition. Call 573-3784. After 5:00 p.m., 573-2486.

AIRPLANES 120

ULTRALIGHT AIRCRAFT 17X11. 2 Place, low hours, good shape, priced to sell. Custom Trailer. Call Mark Britian, 573-6100 or 573-4825.

OILFIELD EQUIPMENT 130

FOR SALE: 16' cattleguard made of good straight 4" drill pipe, 8"—18# I beam, skirts, folding wings. Built solid. STRIBLING WELDING, Fluvanna, 573-3442, 573-7911.

FOR SALE or Trade for 2 Mobile Phones — 1 G.E. Base Station Executive II 8-ch. Search CG Disable Monitor Speed Call with Horn Honk. 2 G.E. Mobile Radios Master — same specs. Phone 806-237-2848.

let your words do the talking
573-5486

BUSINESS OPPORTUNITY 140

BE THE BOSS
Own & operate multi-line vending route Snyder & surrounding area. High profit items. Can start part or full time. Experience not necessary. Requires car & $1,695-$20,000 cash investment. For details call now Toll Free 800-824-7888 operator 511, Komet Vending, 3252 Western Dr., Cameron Park, CA 95682 (916-933-1470).

NEWLY ESTABLISHED Ladies Consignment Resale Store. Fully equipped and ready for take over. Good location, well advertised, expanding clientele. Low investment with or without inventory. Tremendous potential and excellent opportunity for a creative buyer. Owner moving. For more information, please call 573-7557 (Tuesday thru Saturday) or after 7:00 p.m. weekly 915-776-2301.

BUSINESS SERVICES 150

CHRISTY'S DIRTY HOUSE CLEANERS- Offices, houses, general cleaning. Also carpets, paneling, floors. Free estimates. 573-4224.

CARPENTER WORK & Painting wanted. Reasonable prices. Call 573-3677.

CONCRETE WORK, Small Jobs, Free Estimates. Call Shannon Warner, 573-4448 after 5:00.

CEMENT PLASTER & Cinder Block Work Wanted. Phone 1-728-5759.

DON FOX
*Remodeling
*Acoustical Ceilings
*Cabinets
*General Repair
*Interior/Exterior Painting
*Floor Coverings Installed
FREE ESTIMATES
CALL 573-3995

THE FAMILY of Andres G. Rodriguez acknowledges with grateful appreciation the kind expression of your sympathy with your presence, flowers, food and cards. May God Bless You.

Mrs. Paula Rodriguez
Anita Felan & Family
Benita Rios & Family
Rosa Gonzales & Family
Pauline Estrada & Family
Andres Rodriguez Jr. & Family
Gerald Rodriguez

NITA'S INCOME TAX SERVICE
1912 N. 84 Bypass - Snyder
SE Entrance - Wadleigh Construction Bldg.
20 Years Experience
Quality and Confidential Work
An invitation is extended to
all 1984 Clients to come in!
Open 10:00-6:00 Weekday Saturday by appointment
Anita Goolsby 573-9515

let your words do the talking in the CLASSIFIEDS

573-5486

Run 5 Days, the 6th Day is FREE!

DON'T WAIT!!! Complete mower-tiller, edger and garden tractor repair. 510 32nd St. 573-4292.

EXPERIENCED HOUSE Painter: Interior & Exterior; Acoustical Ceilings blown on; Carpenter Work. Call 573-1334.

FOR CARPENTER WORK, from Add-ons & Remodeling to Fix-It Jobs. Call Johnny Blocker, 573-5100.

GENERAL HOME Repairs, remodeled, accoustical ceilings, painting. Small jobs welcomed. Sam Fleming, 573-0391, evenings.

J's ROOFING. Shingles and Hot Topping. Free Estimates. Call 573-6983.

NEW HOME sewing machines. Electrolux cleaners. Quality service. All machines. Stevens, Charlene's Draperies, 573-6601, or 1-235-2889.

REMODELING, PAINTING, Roofing, Add-Ons, General Repair. 573-6488 or 573-8623.

ROEMISCH CONST. is now available to build your custom built home or repair your present home, inside or out. Call 573-2836 or 573-8292.

SHARPENING: can now sharpen Oster Clipper Blades, hollow ground and standard. Guaranteed to match or exceed factory sharpened. Hollow ground clipper blade sets. 510 32nd. 573-4292.

EMPLOYMENT 160

EXCELLENT INCOME For part time home assembly work. For info. Call 504-641-8003 Ext 7063. Open Sun.

MUSICIANS WANTED: Country, Southern, Variety and Rock. Call 573-8755 anytime after 3 p.m. or on week-ends.

NEEDED: 2 Experienced Plumbers, 3 years experience with Journeymans license. Refrigeration Man, experience in Central Heat & AC. Ken's Plumbing & Heating, 1307 N. Dallas, Lamesa. 872-8374. Nights, 872-6141.

Classified Ads Call 573-5486

RELIEF HOUSEPARENTS for Local Girls' Home. Flexible schedule. Call SCOOP 573-5323 between 10 and 2.

let your words do the talking

573-5486

EMPLOYMENT WANTED 161

COLLEGE GRADUATE wanting clerical/-bookkeeping work on evenings and/or weekends. Will work at home or office. Call 573-8377.

WOMAN'S COLUMN 210

A COMPLETE Day Care Center for Snyder. BECKY'S BACKYARD, 1806 39th, 573-9502. Open 6:30 a.m. to 6 p.m.

BRING IN Or call us for the repair or refinishing of your clocks, lamps & furniture.
HOUSE OF ANTIEKS
4008 College
573-4422

CASH LOANS
$20-$250 to working men & women. Call Teresa,
Timely Finance
2409 Ave. R
573-9335

DECORATED CAKES: Birthday, Anniversary, Showers, WEDDING CAKES. For all your cake needs, call 573-6917.

LOSE WEIGHT! FEEL GREAT!! Herbal Nutritional Program. Financial Opportunities. For information, call 573-9463.

LOSE 10-29 pounds per month, 100% guaranteed. A Natural Herbal Formula from the Orient is the answer to your weight problem. Summer's almost here, so DON'T WEIGHT!! Call 573-3179.

NEED TO Look Professional but too busy to get your ironing done? "Pressing Duties", 573-9894.

PROFESSIONAL ALTERATIONS now available at Blanche's Bernina, 1910 26th St.

RESPONSIBLE NON-SMOKING Woman to keep 2 children in my home 5 days a week. 573-5329.

FARMER'S COLUMN 220

A.I. SERVICE. Synchronization, breeding & supplies. Fred Cross, 573-7003. Breed this week - calve Dec. 22-28.

1976 24A HESTON cotton stripper, mounted on 1968 930 Case Tractor; 5 cotton trailers; 1 Seed Trailers; 2 Propane Tanks; Shredder; 1 Case Tandum; and 1 Case Grain Drill; Crouse Oneway and more. Call 915-776-2301 after 7 p.m. Call 915-735-2661 Tuesday thru Saturday, days.

90 AL COMBINE. Call 573-2960 after 6 p.m.

ON THE FARM
TIRE SERVICE
Goodyear
tires available at
McWhorter's
1701 25TH STREET
SNYDER TEXAS 79549
AUTO - TRUCK - FARM
573-4031

Omaha Indemnity
A Mutual of Omaha Company
BUY OMAHA
ALL-RISK
CROP INSURANCE
The Fast payment Company with local Agent and Adjuster. Carl Nunn Insurance Agency. "South Side of Square."
573-5584 Office
573-6066 Home

SPORTING GOODS & SUPPLIES 240

FOR SALE: Over/Under Beretta Shotgun. 12 guage. Mint condition. Smith & Wesson Model 19, 357 Magnum. Call 573-8879 after 5:00.

RECREATIONAL VEHICLES 250

1976 22' TRAVCO MOTOR HOME. 30,000 miles. Excellent condition. $11,500. Call 573-4757.

BARGAIN! New 1985 39' Park Model Travel Trailer. Tip out, air, roll out awning, deluxe interior, many extras. Can be seen at Royal Campgrounds, Hwy 84 Bypass.

CAMPERS TRAILERS RECREATIONAL VEHICLES
SNYDER TRAILER SALES
17th & Ave. F
573-0814
GOOD SELECTION
NEW & USED TRAILERS
Dealer:
Aljo Travel Trailers
Service & Repair all makes Travel Trailers & Stock Trailers

BOATS 251

EARLY SPRING SALE: Evinrude Powered Rigs, Bass Tracker, Dyna-Trak, Sun Tracker, Deckboat, Bomber, Thundercraft. 85 Evinrudes with Oil Injection. Many used Boats in Stock. Priced to Move. Chrane Boat & Marine. Big Spring. 915-263-0661.

1971 INVADER OUTBOARD Boat. 65 HP Mercury Engine (needs some work). Dilly Trailer. $800 FIRM. Call mornings, 573-3314.

MERCHANDISE 260

Antiques, Beautiful & Durable with a very affordable low Price - Here, Where the Finish, all natural, will not water spot. Grandfather clocks, new & old, lowest price tags anywhere!!! $499.95 & up!!! Over 360 Clocks of all kinds!!! Finer Furniture, old & new lamps. All quality, all guaranteed, Solid Oak Rockers w/new Seat Cushions only $199.95 each!!! Solid Oak Gate Leg, End or Dining Table just $249.95!!! Large Solid Walnut 6-leg End Table, Stretcher Base reduced $249.95!!! CABINET MODEL PHONOGRAPH RECORD PLAYER, EXCELLENT QUALITY & SOUND JUST $429.95!!! W/15 FREE RECORDS. Solid Walnut 6-drawer Dresser, large Framed Mirror just $249.95!!! Solid Brass & Wood Walking Canes, walkers or joggers keep unfriendly pets at a distance, choice $15.00 each!!! These are just a few of our many sale prices. Round & Square Dining Tables w/curved Glass China Cabinets and Chairs to match. Also, Sideboards & Buffets, Roll Top Desks, Bedroom Suite, Dresser, Chest of Drawers, Chifforobes, many items - too many to list. Come in & Look!!! VISA, MC, Lay-a-way or Charge It!!!
HOUSE OF ANTIEKS
4008 College 573-4422
9:00 a.m.-6:30 p.m.

BABY QUILTS, aprons, quilts, stuffed dolls. Will deliver a Balloon bouquet, cake bouquet. Babysitting. Having a party of any kind? RENT A CLOWN Gifts by Jane, 2906 El Paso, 573-7491.

COLEMAN GAS Central Air Unit, $200. 2 Washers — G.E., $50; Maytag, $30. Call 573-1519.

COMPLETE STEREO SYSTEM. Reg. $499.99; Now $329.99. Direct Furniture Warehouse, 2505 Ave U, 573-9202. Open till 7:00 p.m.

Classified Ads Call 573-5486

FOR SALE: 8 Horse Power Riding Lawn Mower. Good condition. Call 573-6726.

FIBERGLASS CAMPER Shell for LWB. White, walk-thru door. $400 or best offer. 573-8370 or 573-7870.

FOR SALE: Hide-a-bed (queen size), chair, love seat, coffee table, 2 end tables. $650. King size bed, 9-drawer matching dresser w/mirror, $650. See at 2701 Ave J.

MOVING ACROSS the Street or Across Town. 1 Item or a Houseful. Call Pioneer Furniture, 573-9834.

NEED TO MOVE Across Town or Within a 100 Mile Radius? Call Hoyt Furniture, 573-6161.

NEW & USED SLEEPERS. From $99.95 to $578.98. Direct Furniture Warehouse, 2505 Ave U, 573-9202. Open till 7:00 p.m.

7 PIECE WOOD Diningroom Suite, $348.00. Direct Furniture Warehouse, 2505 Ave U, 573-9202. Open till 7:00 p.m.

SATELLITE T.V. SYSTEMS: If you are considering a Satellite System; seek experience, expect quality. For service, accessories, repairs, installation, or just information. Buffalo Visions, 208 E. Hwy. 573-0886.

SATELLITE
Several used Satellite Receivers. Nice for second hook-ups.
8' Satellite (installed), $1495.
10' Satellite (installed), $1995.
STRICKLANDS T.V.
2413 College Ave
573-6942

THE BOOK NOOK
1921 25th St.
BUY-SELL-TRADE
Tues-Sat 11:00-5:00

USED WOOD STORAGE PALLETS for sale. $3.00 each. Buy one, get one free. See Willie at Snyder Daily News.

USED COLOR TV's. Portables start at $150. Consoles start at $175. Snyder Electronics, 411 E. Hwy., 573-6421.

WATERBED: Kingsize w/all accessories. Very good condition. $275. 2206 40th. 573-8058.

WATKINS PRODUCTS: Have Basic Stock. Call Bennie Sumruld, 573-6549.

WHIRLPOOL REFRIGERATOR. Reg. $989.99; Now $689.99. Direct Furniture Warehouse, 2505 Ave U, 573-9202. Open till 7:00 p.m.

FOR SALE: 55 gallon Steel Trash Barrels, $10 each. Call 573-5486, ask for Willie.

let your words do the talking

573-5486

DOGS, PETS, ETC. 290

AKC REGISTERED FEMALE BOSTON TERRIER, 2 years old. $75. 573-8058.

4 BRITTANY BIRD Dog Pups for sale. Ready to go - had all shots. 573-3677.

FOR SALE: 10 MONTH OLD Male German Shepherd, subject to registry. AKC Registered. Pups from imported stock from Germany. Call 573-7288.

FOR SALE: Baby Hampsters, $3.00. Call 573-9025.

REGISTERED GERMAN Shepherd male puppies. 573-9805.

GARAGE SALES 310

3 FAMILY
FRONT YARD SALE
inside if weather is bad
700 N. Ave T
Thursday 8-4
Little bit of everything

Garage Sale
Association for Retarded Citizens open each Tuesday and Thursday, 10 a.m. to 4 p.m. 2504 Ave. W. All donations of usable items accepted. For local pickup on items, call 573-5610.

GIGANTIC SALE!!
Going out of business
Super Savings!
Texanna's Second Glance
1912 37th St.
Shopping Center
Closed Mondays

GIGANTIC
MOVING SALE
Thursday 9:30-3:00
3503 Kerrville
Lots of kitchen items, Lane Cedar Chest, 2 complete sets of dishes, space heaters, furniture, linens, Avon items, jewelry, metal cabinets, macrame supplies, new portable sewing machine, weights, childrens clothes.

GARAGE SALE
behind
Landes Home Furniture
904 26th Street
Fri. Only 10-5
Lots of used furniture

WANTED TO BUY 320

WANT TO buy good used metal standing cabinet with shelves. Call 573-0793, if answering machine answers please leave name and phone number.

Classified Ads Call 573-5486

RENTALS 330

ALAMO HEIGHTS Trailer Park. Large lots for rent. $75 a month. Call 573-0641. Water furnished.

ALL BILLS PAID. 4 room furnished Apartment. 1 bedroom. 506 28th. $270. 573-8341.

GULF COAST APARTMENTS

2 Weeks FREE Rent + A New Color Television Set For All New Tennants Signing A 6 Month Lease.
3901 Avenue O
573-1488

Large 2 Bdrm Apts. Families Welcomed. All Kitchen Appliances. Cable & Circulating Hot Water Furnished. Washer & Dryer Connections Furnished. Swimming Pool, Sun Deck & Club House to Tennants. Playground Equipment For Little Ones.

1 BEDROOM FURNISHED (Adults Only). 2 bedroom unfurnished. No pets. 573-3558 or 573-6150.

14x80 3 BEDROOM, 2 BATH. Will sell with or without lot. Might lease with option to purchase. 573-2251.

BEAUTIFUL: 3 bedroom, 2 bath. New paint, carpet, curtains. 511 27th. $350 plus deposit. 573-8341.

2 BEDROOM HOUSE - West. 3 or 4 Bedroom House. 2 Bedroom Apartment, bills paid. 573-9992.

2 BEDROOM FURNISHED Mobile Home. $250/month. Water furnished. $100 deposit. Call 573-0317 after 5:00 p.m.

2 BDRM TRAILER house, 1 bdrm house, 2 bdrm house for rent. Call 573-2069 after 5:00.

1 BEDROOM APARTMENT, $50 a week, bills paid. 306 28th. Call 573-3628.

2 BEDROOM MOBILE Home to couple or couple with 1 child. $225 a month. Water furnished, No pets. 573-9510.

1 BDRM HOUSE for rent. Call 573-6803 after 6 p.m.

1 BDRM FURNISHED House for rent. Call 573-5924 after 6 p.m.

COMMERCIAL BUILDING for rent. Call 573-4909 or 573-5285.

CLEAN 1 bdrm Apartment. 2012 26th. $275, all bills paid. 573-1486.

EDGE OF Town: 3 bdrm unfurnished House. 5109½ College. Call 573-4155.

FOR REASONABLE HOUSING, live at The Bunkhouse. Clean & Quiet. Singles Only. $125 month. 2603 Ave F. 573-8231. 573-5761.

FURNISHED & UNFURNISHED 2 bedroom Apartments. Call 573-3689 or 573-0809. After 5:00, 573-3839.

FOR RENT: Furnished 2 bedroom Coleman Street Apartment, $185 a month, plus gas & electricity. No pets. Call 573-0094.

FOR RENT: 2 bedroom Mobile Home. Washer, Cable paid. 573-9001 or 573-0774.

FOR RENT: Completely remodeled Apartment. Furnished or Unfurnished. Call 573-7189 or 573-3922.

FOR RENT: 6 room unfurnished House, west of Snyder. Deposit required. 573-7306.

FOR RENT: Nice 1 bdrm Apt. 2701 Ave X. Call 573-4155.

MOBILE HOME in Country, like new, 3 bdrms, 2 baths. Call after 6 p.m., 573-9603.

NICE 2 Bdrm Duplex with garage. Fenced backyard. Built-in appliances. Refrigerated air. Central heat. Call 573-0614, ask for Linda. After 5:00, 573-1231.

NICE FURNISHED Efficiency Apartment. Water & Gas Paid. No Pets. Deposit. 573-7150.

NICE 2 Bedroom House, $175 month. 305 28th Street. Phone 573-0664.

ONE & TWO Bedroom Furnished Apartments for rent. Call 573-[illegible]

RENT "N" OWN. Appliances, furniture, televisions, stereos. Rent "N" Own, 2514 Ave. R, 573-4844.

By Carrier:
1 Year—$52.60
6 Months—$27.05
Tax Included

By Mail In County
1 Year—$36.00
6 Months—$21.77
Tax Included

WIN A FREE 1-YEAR SUBSCRIPTION TO THE SNYDER DAILY NEWS

PERSONS SUBSCRIBING OR RENEWING SUBSCRIPTION FOR 6-MONTHS OR MORE DURING MARCH WILL HAVE A CHANCE FOR A FREE 1-YEAR SUBSCRIPTION.

DRAWING TO BE HELD MARCH 31, 1985

CLIP COUPON & BRING TO THE SNYDER DAILY NEWS, 2103 25th OR MAIL TO P.O. BOX 949 TODAY

NAME _____
ADDRESS _____
CITY _____
STATE _____ ZIP _____

A SIMILAR DRAWING WILL BE HELD EACH MONTH

CLASSIFIED ADS 573-5486

let your words do the talking in the

CLASSIFIEDS

573-5486

Run 5 Days, the 6th Day is FREE!

SPACIOUS, ATTRACTIVE Furn. office space. College & Hwy 84. 573-6381

STORAGE SPACES for rent, 10'x22' and 8'x10'. Call 573-7996 or 573-8085.

TRAILER SPACE for rent, $68 a month, water furnished. 573-7129.

WHY RENT? Use your tax refund to own your own home! Call Weedon for details, collect, 806-763-5319.

MOBILE HOMES 340

1978 14x80 CENTURION. 2 bath. Underpinning. Porch. Window Shades. Step-up Kitchen & Dining Room. Call between 9 & 5 only, 573-6423.

DOUBLE WIDE: 3 bdrm, 2 bath, on 2 large lots. Owner finance. 2100 Ave N. Russell Jones, 573-2251.

$99 DOWN BUYS You Your Very Own 2 or 3 Bedroom Mobile Home. Price & Payments Vary. Call Weedon, collect, at 806-763-5319.

EXTRA NICE Mobile Home Lot for rent or sale. Best school district. Good garden spot. 573-2251.

FOR SALE by owner: 1977 14x82 Majestic 3 bdrm, 2 bath. All appliances. Nice corner lot. 573-7089.

FOR SALE: 14x82 1983 Town & Country. 3 bdrm, 2 bath, low equity, take over payments. Set up in a Park. After 2:00, 573-1556.

HANDY MAN'S SPECIAL! A used 2 bedroom, 1 bath Mobile Home, new carpet & paint. $500 down. Payments, $136.97 for 84 months. Free delivery. Call Weedon, collect, at 806-763-5319.

LEASE-PURCHASE. Beautiful 1985 3 bdrm, 2 bath Mobile Home. No down payment. Low monthly payments. In excellent condition. Call Mr. Davis, collect 915-332-7022.

MOBILE HOME LOT in the Country. ½ Acre +, $100 a month, located Southeast of Snyder approximately 6 miles. Call 573-1439 or 1-800-592-4734.

2 MOBILE HOME Lots for sale at 2405 O'Neal, $6500. Call 573-8406 or 573-0189.

NO CREDIT? Bad Credit? or Good Credit? Own your own Mobile Home. Call Weedon, collect, 806-763-5319.

10 PRE-OWNED HOMES. Credit is no problem. Call 1-697-0527.

REPOSSESSION, 1982: 14x60, 2 bedroom, 2 bath Mobile Home. Assume payments. Call J.W. at 915-366-5206.

1979 TOWN & COUNTRY Mobile Home, 14x80. Extra nice, 2 bdrm, 2 bath, partly furnished. No equity, assume payments. Call 573-8098 after 5:00.

WE HAVE 18 WIDES. Best prices available on 14, 16, 18 and Double Wides. Call 573-2577 after 6:00.

WANTED TO BUY, RENT 350

WANTED: OFFICE SPACE. The Scurry County ASCS is accepting bids to lease office space. Bid closing date is April 5, 1985. For details contact ASCS Office, 3424 Avenue T, (915) 573-0171.

REAL ESTATE 360

LOT FOR SALE BY OWNER: 1 acre across from Old Rodeo Grounds. Price reduced. Call 915-758-6037 after 8 p.m.

NEW BRICK Home for sale. 1800 sq. ft. Air Conditioning/Central Heat. Fully carpeted. 9 miles East on Camp Springs Road. If interested, call 573-7056.

OLD WEST Snyder. West School. 2 br, 2 bath, 2 CP, Play Loft. Lots of Closets and Storage, Insulated, Very Nice Inside. Fenced Yard, Storage Building, Shop & Dog Kennel. Low 40's. Call for Appointment, 573-0135; 573-8901.

611 East Highway
JACK & JACK Realtors
573-8571
573-3452

HOMES OF ALL SIZES
321 36th- 3-2-2, corner, trees.
311 34th- 2 bdrm w/shop.
120 Peach- Large 2 bd, Austin stone.
2900 35th- 3-2-LR & Den. Colonial Hills.
3001 Ave W- Nice large older home.
2704 Ave W- Affordable 3-1½.
FHA ASSUMABLE- Close to schools, 4 bd, 2 bath, brick.
NEAT & CLEAN- 2 yr old, 3-2-2 on Ave A.
COUNTRY LIVING- Approx 75 acres w/custom built home.
WEST SNYDER- Low Equity, owner financed, 4 bd, 2 bath.
NEW LISTING- 2 bd, with lots of extras. Ideal location, Southwest, call for details.
CHILDREN CAN WALK TO SCHOOL- LR & Den, 3 bd, 1¾ bath.
LARGE HOME for family and business, over 3000 square feet.
PRICE REDUCED in CEdar Creek. Custom built, about 1 year old.
HOMES w/acreage, call for details.
LUXURY HOME- 4700 El Paso, contemporary.
ON FREDONIA- 3-, neat & clean.
SPACIOUS HOMES in Bassridge. 3-2½-2 w/pool. 4-2-2 w/hot tub.
IN COLONIAL HILLS- neat and clean. Ready to move into. Roomy. 3-2-2, LR & Den.
PARK PLACE with established homes. Stanfield school. All 3-2-2.
NEARLY NEW- East, low $50's. 36th, 3-2-2 and 315 32nd.
WEST 30th- Quiet Street, 3-2-2.
TOWNHOUSES in Cedar Creek ready for occupancy.
IF YOU would like to custom build your own home, see us for plans, financing, builder, etc.

Faye Blackledge . 573-1223
Lenora Boydstun . 573-6876
Joan Tate 573-8253
Howard Jones 573-3452
Dolores Jones 573-3452

611 East Highway

WEST 30th
Brk; 3 bd; 1 full bath, 2—¾ baths; on 10 acres; city water; pecan & fruit trees.
Joan Tate 573-8253
Jack & Jack Realtors
573-8571

TEXAS VETERAN Land Sale, 20 acre tracts on pavement in Fisher County. Call at night (915) 735-2808.

1 YEAR OLD: 3 bedroom, 2 bath Home on 5½ acres at Dunn. Richardson Realty, 573-6917.

HOUSE FOR SALE: 3 bdrm, 2 bath, formal living and diningroom, large den w/Ben Franklin Stove, 2 separate carports, outside storage building. Call for appointment, 573-7486.

LARGE HOME in Colorado City. $36,000. Call 728-8978 after 5 p.m.

2 BEDROOM HOUSE. Completely remodeled for sale. $15,000. Call 573-7189.

FOR SALE BY OWNER: House on Cedar Creek Drive. Less than 1 year old. Sprinkler System. Professional Landscaping. Lots of extras. Phone 573-1630.

City REALTORS
4610 College Ave
573-7100
573-7177

COLONIAL HILL: Luxury home. All new built-ins + washer, dryer & refrig. Priced to sell.
CEDAR CREEK: Stucco 3-2½-2. Formal liv. & din. Den w/frplc.
WESTRIDGE: Lrg. 3-2-2 brick. Frplc. Extra big lot w/tile fence.
EAST: 4-1. Den, frplc. & apt.
ETGEN DR: Well-built 3-2-2 brick. Less than 2 yrs. old.
ASSUMABLE LOAN: 3-2-2 brick. Exclusive.
GALVESTON: 4-2½-2 brick. Deck & jacuzzi.
WEST: 3-2-2 brick. Frplc. CH&A.
NEAR STANFIELD: Lrg. 3-1¾ brick. Built-ins.
PARKVIEW: 3-2-2 brick. Lovely yard. Pool & greenhouse.
TWO STORY: 5-3 home. Well decorated. Pool & basement.
WEST: 3-2¾ brick. Lrg. gameroom.
HOME ON ACREAGE: Three 3 bdrm. 5 to 14 acres.
TOWLE PARK RD: Beautiful lrg. home. Many extras.
ALMOST NEW: 2-1. CH&A. East.
EAST: 3-1. New carpet. Corner lot.
STARTER HOMES: 2 & 3 bdrm. East.
WE HAVE businesses & acreage.

Annette Waller 573-9467
Jay Massingill 573-2826
Kathy McFaul 573-8319
Clarence Payne 573-8927

FOR SALE BY OWNER: 3 bdrm, 2 lg baths, 2 car garage, brick. 2200 sq. ft. Jenn-Air stove top built-in to island in kitchen, built-in microwave & wall oven. Formal living room, dining room & lg. den, split bedrooms, lg. master bedroom. 1 bedroom has Murphy bed with built-in book cases. Almost new carpet throughout. 4 ceiling fans, paneled walls. Well insulated walls & attic. Insulated windows & doors. Custom drapes. Fire alarm system. Lots of closet space. Air tight wood burning fireplace. Central heat & air with electric air cleaner & humidifer. Electric garage door opener. Storage building. $65,000. Shown by appointment only. Call 573-6459 after 5:00.

APARTMENT BUILDING in excellent condition. Bargain price. Below appraisal. 4 furnished units. Garages. Fenced. 573-9638 after 5 p.m.

ATTRACTIVE 3-1 well built Home. Central heat, large attic, garage & fenced yard, on corner lot. Equity & assume low payments at 10½%. 573-4879.

1 ACRE 6 Miles North of Westbrook, water well, septic system, trees, paved road. $2500. 644-2331 or 644-2371 after 5:00.

Classified Ads Call 573-5486

LOIS GRAVES REALTORS
573-0614
573-2540
3905 College

CEDAR CREEK
2 Luxury New homes facing the golf course. 1803 Cedar Creek and 1507 Augusta Drive.
PARK VIEW
Custom built & nearly new. 3-2-2. Professionally decorated & landscaped. Beautiful heated pool. Let us shown you this lovely home.
BEST BUY
3-2-2-landscaped yard & custom drapes - 1 year old. Priced right - $70's.
PARK VIEW
Lrg 4 bdrm, 2 bth, corner lot. Perfect home for the large family.
ETGEN BLVD
Nearly new, 3-2-2 home, nice corner lot, 90's.
"THE CEDARS"
Luxury Town Homes. Over 2100 square ft. with all the extras. Beautifully decorated & landscaped. Privacy-security & Maintenance.

Sandy Harlan 573-2989
Linda Martin 573-1231
Mike Graves 573-2939
Lois Graves 573-2540

Elizabeth Potts REALTORS
573-8505
College Ave. & 30th

SPACE W/GRACE- Custom home, excellent location, many extras.
WELL MAINTAINED- 3-2-fpl. 3501 Houston, 3706 Ave U.
NEW HOMES- move now, 3-2-2, Lubbock Ave & Cedar Creek, W of Jr. Hi.
LUXURY PLUS- 4-3-2, bar, gameroom, 1601 Augusta.
LOCATION & STYLE- Nice 3-2-2, built-ins, 3209 Houston, 70's.
PRETTY DECOR- 3-2, reduced, 410 36th.
COUNTRY- Acreage, 3 bdrm, Extras.
AFFORDABLE- 2 & 3 bd. 401 20th, 219 36th, 1101 26th, 1302 28th, 1413 22nd, 2406 Ave L, 3766 Dalton, 302 35th, 208 35th.
OWNER FIN- 2-1-1 w/apt for income, 30's.
NEARLY NEW- 3-2-2, 3307 Houston.
NEW LISTING- Colonial Hills, 3-2-2, 3006 Crockett.
NEW ON MARKET- 3-2½-2, Lg. rooms, 2508 35th.
ASSUME F.H.A.- Nice 3-1½-2, 200 33rd.
OUT OF CITY LIMITS- 3-1-1, 208 38th.
GOOD LOCATION- 3201 43rd, 3102 El Paso, 5306 Etgen.
ASSUMABLE LOANS- Eastridge Dr.

LOTS, ACREAGE & COMMERCIAL PROPERTY

Margaret Birdwell 573-6674
Wenona Evans 573-8165
Temi Boren 573-3465
Elizabeth Potts 573-4245

BUYING? OR SELLING?
BEAVERS REAL ESTATE
PHONE 573-9472
71 Sections Grass land, Near Guthrie, Texas. Minerals goes, plenty of water. Big tanks, windmills, and river goes through it.
150 Miles of new fences, rest in good shape.
160 Acres farm land Lloyd Mt. area, all in cult ½ Minerals.
3 BR ¾ of Blk. 3 Horse lots. N-Snyder. Rent house Corner of Y & 30th St.
3 BR #3 acres West of Town $100,000.00.
28 Commercial lots Boothland.
3 BR & 5 acres N Snyder in city limits.
BEAVERS REAL ESTATE
PHONE 573-9472
Jean James 573-2824
Forrest Beavers 573-6467

2 BEDROOM HOUSE, owner will finance with small down payment. 573-7137.

BY OWNER: 2 bedroom House. Attached garage, fenced backyard, fruit trees. 316 36th Street. Call 573-5238.

FOR SALE: 3 bdrm, 2 bath, new air conditioner, ceiling fans, nice fenced backyard w/ patio, large pecan trees, West Elementary Sch. Dist., excellent neighborhood. Must see to appreciate. 3404 Irving. 573-8848.

HOUSE FOR SALE: 2 bdrm, Cedar Lined Wardrobe Closets, Carpet, Corner Lot, Cyclone Fence. To see, call 573-3915.

STEVENSON REAL ESTATE
4102 College
573-5612

COLONIAL HILLS.. new listing, 3-2-2, all extras, lovely inside, on Crockett.
SOUTHWEST.. assume FHA loan, 3112 39th.
GAIL.. cafe, mobile home, plus 5 lots, $45,000.
STANFIELD.. 1507 39th, 3-1, $20,000.
MOBILE HOME LOTS.. 606 N. Ave U.
EAST.. 3-2-2, 209 37th, brick.
3912 EASTRIDGE.. 3-2-2, area's best.
ACREAGE.. 4½ acres on Freeway, $10,000.
3501 HOUSTON.. 3-2-2, high 40's.
TOWLE PARK ROAD.. two custom built homes.
3704 MURIEL.. low 40's, approx 1200'.
OLD WEST.. 2908 Ave X, brick, mid 40's.
COLONIAL HILLS.. brick, 3-2½-2, 3102 El Paso.
200 33rd.. 3-2-2, 40's.
EAST.. 306 33rd, $30,000, under appraisal.
WEST.. large home on water line, 60's.
EAST.. 204 31st, $30,000.
DUNN.. 5 acres with nice home, $50's.
WEST 37th.. 3-2-1, 50's.
STANFIELD.. 2301 43rd, great location, low 80's.
3214 42nd.. immediate possession, mid 40's.
PARKVIEW.. 4700 El Paso, almost new, 3-2-2.
IRA.. 30's, good location.
WEST.. home with 1.3 acres, $35,000.

Margaret Sherrod 573-3606
Joyce Barnes 573-6970

let your words do the talking
573-5486

LEGAL NOTICES 010

LEGAL NOTICE
THE SNYDER Independent School District Board of Trustees hereby give notice of an election to be held on April 6, 1985, for the purpose of electing one trustee each for positions designated as Place One and Place Two for a full three year term. Absentee voting by personal appearance will begin on March 18, 1985, and continue through Tuesday, April 2, 1985, from 8:00 a.m. to 4:00 p.m. on each day which is not a Saturday, Sunday, or an official state holiday. Absentee voting in person will be conducted at the Snyder Public Schools Administration Building located at 2901 37th street, Snyder, Texas. The Snyder City Hall will be the polling place on election day and will be open for voting from 7:00 a.m. to 7:00 p.m.

NOTICE OF APPLICATION FOR OIL AND GAS WASTE DISPOSAL WELL PERMIT
Lariat Oil & Gas of Lubbock, Inc. has applied to the Railroad Commission of Texas for a permit to dispose of produced salt water or other oil and gas waste by well injection into a porous formation not productive of oil or gas.
The applicant proposes to dispose of oil and gas waste into the Wolfcamp (Formation), Sue (Lease), Well Number 1. The proposed disposal well is located 3 miles NW of Ira in the Sharon Ridge (Clearfork) Field, in Scurry County. The waste water will be injected into strata in the subsurface depth interval from 1911 to 4350 feet.
LEGAL AUTHORITY: Chapter 27 of the Texas Water Code, as amended, Title 3 of the Natural Resources Code, as amended, and the Statewide Rules of the Oil and Gas Division of the Railroad Commission of Texas.
Requests for a public hearing from persons who can show they are adversely affected, or requests for further information concerning any aspect of the application should be submitted in writing, within fifteen days of publication, to the Underground Injection Control Section, Oil and Gas Division, Railroad Commission of Texas, Drawer 12967, Capitol Station, Austin, Texas 78711 (Telephone 512/445-1373).

Lethal shots okayed

WASHINGTON (AP) — The Supreme Court today allowed continued use of lethal injections to execute death row inmates.

The court unanimously ruled that federal drug regulators are not required to ensure that the injections do not produce a slow and painful death.

The 9-0 decision shields from legal attack the Food and Drug Administration's decision not to test the drugs used in lethal injections.

The court overturned a federal appeals court ruling that ordered the FDA to ban lethal injections unless it determines they kill quickly and painlessly.

The U.S. Circuit Court of Appeals here ruled in 1983 that states must suspend use of the injections.

But Chief Justice Warren E. Burger blocked that ruling, pending Supreme Court review of the appeals court decision, and permitted states to continue to use the injections.

Thirteen states permit or require execution by lethal injections. They are Arkansas, Idaho, Illinois, Mississippi, Montana, Nevada, New Jersey, New Mexico, North Carolina, Oklahoma, Texas, Utah and Washington.

Lethal injections have been used to carry out eight executions since the Supreme Court reinstated capital punishment in 1976.

Justice William H. Rehnquist, in his opinion for the court, said decisions by the FDA not to exercise its enforcement powers generally are not subject to review by the courts.

"An agency's decision not to take enforcement action should be presumed immune from judicial review," Rehnquist said.

Generally, the only exception would be if Congress provided guidelines requiring the agency to exercise its powers, he added.

The Reagan administration, which prevailed today, said there is no reason to believe the agency has such a legal obligation.

CHILD W
of Human
front) Per

TOPS IN
team pict
scored en
champion
(front ro
(back ro
structor

CHAMPI
Klondike
cond ann
petition
high indi
individua

Cont

WASH
Secretar
vowed t
Douglas
governm
millions
from its
the Nort
Pentago
The do
day, disc
has alre
ing mor
legal de

McL

M emb
and the
Duri
Democ
of the
His p
At the
board
The
McLau
pear a
Past
McKa
Dalton
David

Foster homes are critical need here

CHILD WELFARE WORKERS — Staffers of the Texas Department of Human Resources Snyder Child Welfare office are (from left front) Penny Cochran, Jeanette Davis, Kay Bellamy, Winona Curfman, (back row) Frances Gutierrez and Sammy Ortegon. (SDN Staff Photo)

April has been proclaimed National Child Abuse Prevention Month.

"There is a growing public awareness of the seriousness of children being physically, emotionally and sexually abused by parents and caretakers,'" said Winona Curfman, foster home development worker.

"The mental health profession is warning us of the devestation that they see in human personalities resulting from childhood abuse. Correctional institutions and mental health facilities are attempting to help society cope with the personality disorders caused by childhood abuse," she said.

Families who would consider helping children by providing them a temporary home are urged to attend an orientation meeting at 7 p.m. Friday at First United Methodist Church.

According to Curfman, this is a very significant way that members of the community can help children in crisis.

The agency mandated by law to prevent abuse and intervene in families to improve children's chances of growing up whole and well is Children's Protective Services, a division of the Texas Department of Human Resources. With over 1.4 million youngsters severely neglected, deprived, beaten and sexually abused each year by parents and step-parents nationally it is a challenging program.

Locally, Scurry County Child Welfare is actively involved in this community to help families and children, Curfman explained. Referrals are made from the community by concerned citizens who see children in danger. They may call the Child Welfare Office at 573-6501 or the Child Abuse Hotline number 1-800-252-5400 and a worker will investigate. All calls are kept anonymous.

Child Welfare Workers locally are Kay Bellamy and Sammy Ortegon. They investigate approximately 12 new referrals a month and carry about 60 total open cases where they provide social services to families. In extreme cases, they utilize the court and legal system to obtain managing conservatorship of children and place them in foster care for their protection, Curfman explained.

Penny Cochran provides secretarial support. Francis Gutierrez provides homemakers services to families. Jeannette Davis is supervisor of the unit.

Curfman said that finding foster homes is a continuing critical need of this agency.

Ira, Klondike win WTC judging events

TOPS IN LIVESTOCK JUDGING — The Ira FFA livestock judging team pictured here was the second high team in swine judging and scored enough points in lamb and steer judging to claim the overall championship of Tuesday's stock judging contests at WTC. They are (front row, from left) Brent Withers, Ward Baze, Janna Burrow, (back row) Philip Carter, Rebel Royall, Barry Ezra and Ira ag instructor Richard Long. (SDN Staff Photo)

Ira and Klondike High Schools were the big winners in Tuesday's second annual Western Texas College Land and Livestock Judging Contests.

The Ira team took home the overall championship of the livestock judging with 1,444 total points while the Klondike group claimed top honors in the land judging contests with 596 points.

In all, 48 teams from area high schools participated in Tuesday's contests — 34 in the livestock judging and 14 in the land judging.

Complete results were as follows:

LAND JUDGING
Team Championship
Klondike High, 596
Lamesa High No.1, 582
Sweetwater High, 549
Individuals
1. Chris Williams-Klondike, 2. Tim Flannagan-Lamesa, 3. Keith Ramey-Sweetwater, 4. Jon Cave-Klondike, 5. John West-Lamesa.

LIVESTOCK JUDGING
Overall Team
1. Ira High No.1, 1,444.
2. Guthrie High, 1,440.
2. Robert Lee High No.1.
Overall Individuals
1. Robert Masterson-Guthrie, 2. Gary Teague-Roby, 3. Brandon Harris-Lamesa, 4. Brian Starr-Wylie, 5. Robert Douglas-Robert Lee.

SHEEP
Team Points
1. Lamesa High 423, 2. Loraine High 419
Individuals
1. Todd Schwartner-Lamesa, 2. John Grisson-Lamesa, 3. Scott Masterson-Guthrie.

SWINE
Team Points
1. Guthrie High-532, 2. Ira High No.1-519
Individuals
1. Steve Lee-Snyder, 2. Gary Teague-Roby.

CATTLE
Team Points
1. Borden County High-539, 2. Abilene High-527
Individuals
1. Kevin Easley-Abilene High, 2. Keith Osborn-Post, 3. Brandon Harris-Lamesa.

Ira one-act advances in play competition

CHAMPION LAND JUDGING TEAM — These four members of the Klondike FFA Land Judging team took the championship of the second annual Western Texas College land and livestock judging competition Tuesday. They are (from left) Terry Van, Chris Williams, high individual for the contest, Jim Davis and Jon Cave, fourth high individual. (SDN Staff Photo)

Ira High School's one-act play was named co-winner in District 6-A Zone UIL competition Tuesday at Western Texas College.

Ira's entry "To Burn a Witch" and Roscoe High School's "The House of Bernarda Alba" will advance to the district contest Saturday in Garden City.

Loraine High School was named alternate with its entry "Impromptu."

Ira cast members include Kaila Barbee as Mary Abigail Gentry; Melissa Klepper as Ruth Hannah Smith; Cathey Crowder as Dame Stanley; K'Ana Scott as Widow Jones; and Suzy Foster as an attendant. Sue Parham is the director.

Chris Reyna operated the lighting for the play while Hector Espino was in charge of sound.

Following the contest, Klepper was named to the all-star cast and Scott received honorable mention.

Other all-star cast members included Lorna Moore of Westbrook High School; Sherri Webb of Loraine High School; and Jamie Sasin, Gwen Williams and Becky Bolen of Roscoe High School.

Named best actress was Mary Langston of Roscoe. Tommy Munoz of Loraine garnered best actor honors.

Two of the four plays to be presented in Garden City will advance to the area contest in Odessa.

Contractor bills Pentagon millions

WASHINGTON (AP) — Navy Secretary John F. Lehman has vowed to block the McDonnell Douglas Corp. from obtaining government reimbursement for millions of dollars in legal fees from its private court fight with the Northrop Corp., according to Pentagon documents.

The documents, obtained Tuesday, disclose McDonnell Douglas has already submitted bills totaling more than $24 million for its legal defense in a suit involving construction of export versions of the F-A-18 jet fighter.

The legal expense claims were submitted even though the firm was advised by the Navy more than a year ago that "this litigation provides absolutely no benefit to the Navy's F-A-18 program."

A spokesman for McDonnell Douglas on Tuesday defended the claims as a proper — and recoverable — cost of doing business.

McLaughlin Award history told

Continued From Page 1

M emblem which was the trademark for his ranching interests and the Diamond M Foundation.

During his life, he held high posts in both state and national Democratic Party organizations to include serving as chairman of the Texas Department of Public Safety Commission.

His philanthropic interests were as varied as his business ones. At the time of his death he was serving as vice president of the board of directors of the National Cowboy Hall of Fame.

The annual chamber banquet was an important time for McLaughlin as he hosted a range of distinguished guests to appear as its principal speaker.

Past recipients of the award named in his honor include Edith McKanna in 1977; Ike Dolen Jr. in 1978; C.W. Lantrip in 1979; Dalton Walton in 1980; John Fagin in 1981; M.L. Duke in 1982; David Hines in 1983; and E.D. Walton in 1984.

Arrests follow local drug charges

Continued From Page 1

Three of the suspects were taken into custody in Big Spring at 11:20 p.m. Monday. The remainder of the suspects were picked up at various locations around Scurry County Tuesday.

Arrested Monday night in Big Spring were 27-year-old Michael McLane Floyd of Midland; 33-year-old Paula Hayes Lytle of 317 34th St.; and Traci Cooley, also of 317 34th St.

Bonds for those three were set at $25,000 each.

Floyd is currently free after posting bond Tuesday afternoon. Wednesday morning, Lytle and Cooley remained in Scurry County Jail in lieu of bond.

Jailed Tuesday evening and currently being held in the Scurry County Jail in lieu of bonds set at $15,000 each were:

—34-year-old Joline Rhoades of 1805 40th St.
—26-year-old Joseph Edmond Young of 213 35th St.
—19-year-old Gary Scott Matthews of Stamford.
—27-year-old Allen Ray Gleghorn of 301 N Ave. U.
—29-year-old Velma Marie Hendricks of 213 35th St.
—27-year-old Teddy Mack Tutor of 308 Ave. U.

Also arrested Tuesday was a 16-year-old female juvenile. Collier said Wednesday that charges against her would be pursued through juvenile court.

Another arrest warrant issued Monday has not produced an arrest as yet, Collier said.

One-act play on to district

Continued From Page 1

day and the top two plays from that contest will be judged against Snyder and Sweetwater next Tuesday.

Advancing from that contest were Pecos High School's production of "Hedda Gabler" and the Midland Lee Freshman School's production of "Little Women."

4 city arrests

Snyder police logged four misdemeanor arrests Tuesday.

Two subjects were jailed for being intoxicated on a premises licensed to sell alcohol and one each for driving while intoxicated and unlawfully carrying a weapon.

Irish poet and playwright William Butler Yeats died in 1939.

Chamber meeting action reported

Continued From Page 1

tickets were sold in one week. He estimated 1,000 could have been sold if there had been sufficient room to accomodate that many people. A change in seating arrangements has reduced the available space on the coliseum floor.

Director Mike Banta reported that the next Century II: Leadership Scurry County meeting would be at 2:30 p.m. Tuesday at SACROC.

Don Newbury reported that some 140 new members have been added to the chamber's rolls since the recently completed membership drive. The overall total may increase to 150 he said.

Citing this as "the best drive ever," Newbury complimented the work of team captains, which he characterized as "dynamic."

In addition, chamber directors were each given a list of names of members to be visited during the year. It is part of a new chamber effort to keep in touch with its membership.

Newbury reported also that the recently completed NJCAA tournament incurred expenses of approximately $19,000 with some $14,000 in revenues collected. He said approximately $5,000 from the city-maintained motel tax fund would be needed for the remainder of the expenses.

Margaret Drum reported that the nine high school basketball playoffs held in the city recently generated about $10,000. Expenses incurred were also about $10,000.

Directors attending were Jerry Vestal, John Jarrell, Gene Thomas, Banta, Drum, Denman, Murray Anne Ray, Newbury, Max von Roeder, Phil Fortune, Baze and Castillo.

Markets
Midday Stocks

NEW YORK (AP) Morning stocks

	High	Low	Last
AMR Corp	40 3/8	39 7/8	40
Amer Can	51 3/4	51 1/4	51 1/2
Ameritech	83	82 3/4	82 7/8
AMI Inc	24 1/4	23 7/8	24
Am Motors	3 5/8	3 1/2	3 1/2
AmStand	31 3/4	31 5/8	31 3/4
Amer T&T	21 3/4	21 1/2	21 5/8
ArmcoInc	9 5/8	9 3/8	9 1/2
AtlRichfld	48 1/2	48 3/8	48 3/8
BancTexas	4	3 7/8	3 7/8
BellAtlan	85 1/8	84 3/4	84 7/8
BellSouth s	37 3/8	37 1/4	37 3/4
Beth Steel	16 7/8	16 5/8	16 5/8
Borden	68	67 1/2	67 7/8
CaterpTr	30 1/8	29 7/8	30
Centel	40 3/8	40 1/8	40 1/4
Chevron	34 3/8	34 1/8	34 1/8
Chrysler	34 7/8	34 5/8	34 5/8
CocaCola	65 7/8	65 3/8	65 3/4
Coleman	30 1/2	30 1/4	30 1/4
ComlMetl	18	18	18
DiamShm	18 1/8	17 7/8	18
DowChem	29 1/2	29 1/8	29 3/8
DressrInd	20 7/8	20 1/2	20 5/8
East Kodak	69 1/4	68 5/8	68 3/4
Enserch	29 5/8	29 1/4	29 3/8
EntexInc	18	17 3/4	17 3/4
Exxon	49 3/8	49	49 1/4
FedlCo	34 3/4	34 3/4	34 3/4
Firestone	18 1/8	18	18 1/8
FtBcpTex	15 1/4	15	15
FordMot	43 5/8	43 1/4	43 3/8
GAF Corp	31	31	31
GTE Corp	43 1/4	43 1/8	43 1/8
GnDynam	73 1/4	72 7/8	72 7/8
GenElec	62 7/8	62 1/2	62 5/8
Gen Food	61 1/2	61 1/4	61 1/4
Gen Motors	76 7/8	76 1/2	76 1/2
GnMotr E n	63 7/8	63 3/4	63 3/4
Goodrich	30	29 3/4	30
Goodyear	26 7/8	26 3/4	26 3/4
GtAtlPac	16 7/8	16 3/4	16 7/8
Haliburtn	30 7/8	30 1/2	30 1/2
Holiday Inn	50 5/8	50 1/2	50 5/8
HoustInd	22 3/4	22 3/4	22 3/4
HughesTl	15	14 7/8	14 7/8
Interfst	11	10 7/8	10 7/8
IBM	130 5/8	129 1/2	130
Intl Harv	9 3/4	9 5/8	9 3/4
Int Paper	50 1/8	49 5/8	50 1/8
JeffPilot s	40 1/2	40 3/8	40 3/8
JohnsJn	40	39 3/4	40
K mart	34 1/8	33 7/8	33 7/8
KrogerCo	40 1/8	40	40
LTV Corp	10 3/8	10 1/8	10 1/4
Litton Ind	67	66 3/4	66 7/8
LoneSta Ind	22 3/4	22 1/2	22 5/8
Lowes	26 7/8	26 3/4	26 3/4
MCorp	22	21 3/4	22
MayDSt s	45 1/4	45	45
Medtronic	31 1/4	31	31 1/8
Mobil	29 1/2	29 1/4	29 1/2
Monsanto s	42 3/4	42 3/8	42 5/8
Motorola s	33	32 7/8	32 7/8
NabiscoBrd	57 7/8	57 1/2	57 3/4
NYNEX	81 3/8	81 1/8	81 1/4
PacifTel	71 3/4	71 3/8	71 3/8
Penney JC	48 3/8	48	48
Phelps Dod	19	18 3/4	19
PhillpsPet	40 7/8	40	40
PhilPet wd	38 5/8	38	38 1/4
Polaroid	27 5/8	27	27 1/2
ProctGamb	56 3/8	56	56 1/8
PubS NwMx	24 1/2	24 3/8	24 1/2
RCA	42 5/8	41 7/8	41 7/8
RepBankCp	32 1/2	32 1/4	32 1/2
Sabine	17 1/8	17	17
Safeway	31 7/8	31 5/8	31 3/4
SFeSouPac	27	26 3/4	26 7/8
SearsRoeb	35	34 5/8	34 3/4
ShellOil	59 1/4	59	59 1/8
Singer Co	35 1/8	35	35 1/8
Southern Co	19 1/8	19	19
Southland	32 5/8	32 1/4	32 1/2
SwstBell	74 1/4	74	74 1/4
Sperry Cp	52 5/8	51 3/4	51 3/4
StdOilInd	62 7/8	62 1/2	62 5/8
StdOilOh	46 7/8	46 1/2	46 5/8
SunComp	50 1/8	49 7/8	49 7/8
TNP Ent	15 3/4	15 3/8	15 3/8
Tandy	33 1/2	32 7/8	32 7/8
Tenneco	40 1/8	39 3/4	40 1/8
Texaco Inc	35 3/8	35 1/8	35 1/4
TexAmBnch	34 3/8	34 3/8	34 3/8
TexComBn	36	35 5/8	35 7/8
TexEastn s	32 1/8	31 7/8	32
Texas Inst	112 7/8	112 1/4	112 1/4

Minor wreck here

A single minor traffic mishap was reported in Snyder Tuesday.

Involved in the 8:06 a.m. collision in the 2400 Block of College Ave. were a 1979 Buick driven by Zanell Powell of 1512 8th St. and a 1980 Ford driven by Bettye Anderson Cobb of 3207 Ave. K.

No injuries were noted in the accident.

Obituaries

Ellen Murdock

LUBBOCK--Services for Ellen Murdock, 59, of Lubbock will be at 2 p.m. Thursday at Resthaven Chapel. Burial will be in Resthaven Park.

She died at 2:55 a.m. Tuesday at Lubbock General Hospital after a brief illness. She was the mother of Donald Murdock of Snyder.

She is also survived by her husband, Truman of the home; another son, a daughter, three sisters, six grandchildren, and one great-grandchild.

Hospital Notes

ADMISSIONS: Valinana Lopez, 1308 19th; Porscha Jackson, 1004 26th; Ora May Huddle, 4202 Avenue U; Rosa Hodnett, 2101 43rd; Richard Wallace, 1916 Coleman; Howard Gambol, 1800 28th; and Howard Gray, P.O. Box 205.

DISMISSALS: Salena White, Pamela Turnbo and Velma Smith.

Sale Ends March 23

Items Available At TG&Y Family Centers Only.

TG&Y® Family Centers

Copyright 1985, TG&Y Stores Co.

A HOUSEHOLD INTERNATIONAL COMPANY

Sale of Sales

2 ROLLS .99

Hi-Dri Paper Towels are 2-ply for extra absorbency. 75 total square feet per roll. Assorted colors. **Limit 6 rolls.**

.99 each

Refreshing Soft Drinks in thirst-quenching 2-liter bottles. Choose your favorite: Coke, Diet Coke, Tab or 7-Up. **Limit 4.**
Sprite not available in some markets.

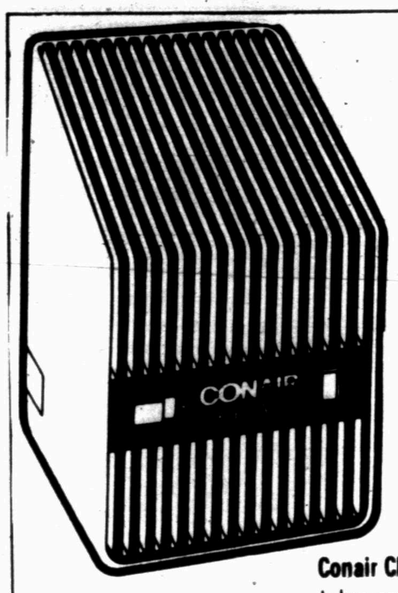

15.99

Conair Clean Air Machine
takes smoke and other foreign objects out of the air.

29.99 Reg. 49.99

A handsome Bentwood Rocker is at home in any decor. The soft, full velvet seat and back highlight its oak finish and adds to the comfort only a Bentwood offers. Save $20 on the best seat in the house! Measures 39 x 21 x 18½". Easy to assemble.

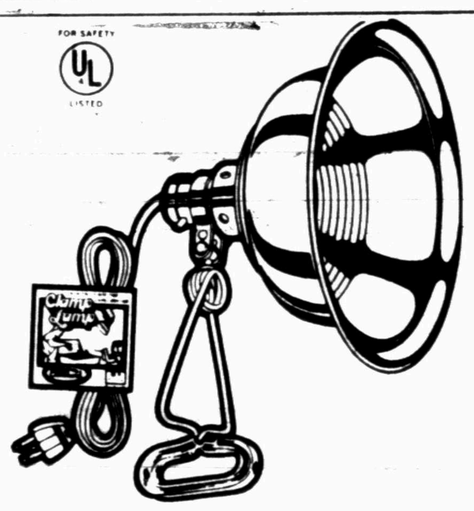

4.99

Clamp on Lamp
light up your summer night

15.99

Conair 1250 Watt Hair Dryer
Reg. 17.99

Men's Assorted Styles
Ties
Reg. up to 8.97
3.00

Deluxe
Baby Stroller
Reg. 54.99
34.99

Men's, Boys' & Girls'
Tennis Shoes
Reg. up to 13.97
3.00

Coleman Fuel
For Camping
Reg. 3.22
2.50
Per Gallon

Touch Control Lamp
Assorted Styles
Reg. 44.99
29.99

G.E. Spacemaker Coffeemaker with Clock
Reg. 59.99
49.99

First Alert Professional
Smoke & Fire Dectector
with Escape Light
19.99

Franklin Nylon Wound
Soccerball
Reg. 9.99
Size 4
8.88

Boys Over-the-Calf
Tube Socks
5 Pair
Reg. 4.99
3.97

4 Drawer
Filing Cabinets
Reg. 64.97
59.97

TG&Y insists upon your satisfaction. If you are not happy with what you purchase, return it with your sales receipt. We will cheerfully exchange it or fully refund your money. If for unforeseen reasons advertised merchandise is not available, we will be glad to offer you a like item of comparable quality and value when possible. Most advertised items are reduced from our everyday low prices. Some merchandise is in limited quantities and available only while supply lasts. We reserve the right to limit quantities. We will be happy to accept your personal check, MasterCard, Visa or cash. We want you to be glad you shopped TG&Y.